2013 S2000 套件改装注册规则（场地赛车）
2013 HOMOLOGATION REGULATIONS FOR SUPER 2000 KIT-VARIANT (CIRCUIT)

前言

对于在 2010 年 12 月 31 日之前已经完成 S2000VK 场地类赛车注册的车型，允许在此规则下注册一个新的完整延伸注册

ARTICLE 3：注册申请要求

1.1 注册

这是指是国际汽联对某款特定车型的 S2000 级别的套件改装的一个官方认证，这款车型要达到足够的产量且之前已经完成 A 组注册，改装还要达到现有的规则要求。

注册申请必须由汽车厂商的总部所在国、或者由厂商出具其整车组装车间所在国的国家汽协向国际汽联递交。

注册必须提交一份带有所附图纸的注册表格（见后）。

注册批准只会授予在现有规则有生效的年份的前一年的 1 月 1 日仍在生产或者此后投产的车型。某一系列车型的注册有效期将在这一车型停产 7 年后终止（见第九条）。

每辆车的车架上必须冲压

Preamble

In the case of a Super 2000 Circuit Kit Variant that has been already homologated before 31.12.2010, it is possible to homologate a new complete extension based on the following Regulations.

ARTICLE 1: SUBMISSION OF APPLICATIONS

1.1 Homologation

This is the official certification made by the FIA that the Super 2000 Kit Variant of a specific model of car, previously homologated in Group A, has been made in sufficient series production numbers and meets the requirements of the present regulations.

The homologation application must be sent in to the FIA by the ASN of the country in which there is the headquater of the manufacturer or, with the approval of this manufacturer, by the ASN of the country in which there is the assembly plant of the vehicle of the make considered.

It must give rise to the drawing up of a homologation form (see hereinafter).

Homologation will only be granted to car models which are still in production on January 1st of the year preceding the one for which the present regulations are valid, or the production of which was

生一个车架号码。每个车架号码必须对应唯一一辆赛车。

1.2 车辆的型号（车型）

车型是指所有相同的隶属于一系列（见后）和同一生产批次，可以通过相同的设计概念，相同的车身外部轮廓线型，相同的发动机传动系到车轮的机械结构识别的车辆。一个车型在连续 12 个月内必须至少生产 2500 辆。对于同一车型的所有车辆，前后保险杠的材料必须相同。同样，行李厢盖，发动机舱盖和前翼子板的材料也必须相同。

来自同一车型的保险杠不可以包括可调节零件。

1.3 车辆的系列（车系）

由同一个生产厂商在同一个生产批次生产的几个不同的系列车型。一个车系在连续 12 个月内必须至少生产 25000 辆，拥有相同的车身外部轮廓线型。车身外壳的材料（包括车门）和轮距也必须相同。

同一车系的所有车型都必须能通过生产厂商的正规商业渠道供应。

车身外部轮廓线型在下列细节处可以有所变化：

- 前后保险杠的形状与材料，

started after that date. Homologation of a series-produced car will lapse 7 years after the date on which the series production of the said model stopped (see Article 9).

A chassis number must be punched on a structural part of each car produced. Each number must refer to one car only.

1.2 Model of car

All the identical cars belonging to a family (see below) and to a production series distinguishable by an identical conception and identical external general lines of the bodywork, and by an identical mechanical conception of the engine and the transmission to the wheels. At least 2500 cars must have been produced in 12 consecutive months. For all cars of the same model, the materials of the front and rear bumpers must be identical. The same applies for the material of the boot lid, engine bonnet and front wings, respectively.

The bumpers of cars derived from the same model may not include adjustable parts.

1.3 Family of car

Different series models belonging to one and the same production series of the same manufacturer. At least 25000 cars with identical external general lines of the bodywork must have been produced in 12 consecutive months. The material of the bodywork/shell (including the doors) and the wheelbase must also be identical.

All models must be available through the normal commercial channels of the

– 行李厢盖、发动机舱盖和前翼子板的材料，

– 可拆卸的空气动力装置（导流板、尾翼、护底板），

– 功能和舒适性装置（遮阳顶、外置灯，门把手，外置后视镜），

– 装饰条和装饰物；

– 左舵驾驶和右舵驾驶类型；

– 两门版和四门版，前提是这种变形只涉及车门，车门开启装置和 B 柱；

设立车系时可以考虑包括发动机排量超过 2 升的车型。

1.4 国家汽协要求达到的条件

车辆注册的申请只能由国家汽协代表制造商向国际汽联提交，前提是制造商签署一份书面声明承诺其遵守注册规则的各项规定（参见注册程序和授权保证书）。

申请必须递交给国际汽联车辆注册规则委员会，递交时间或者在该委员会当年召开第一次会议之时，或者当年已经递交过第一次注册申请已经被提交。

在递交注册批准申报时，必须附上以该种车辆的生产厂商的名义出具的书面声明。此声明

manufacturer.

The external general lines of the bodywork may vary in the following details:

- shape and material of front and rear bumpers,
- material of the boot lid, engine bonnet and front wings,
- removable aerodynamic devices (spoilers, wings, sill mouldings),
- control and comfort equipment (sun roof, auxiliary lamps, door handles, exterior mirrors),
- decorative strips and mouldings,
- left- and right-hand drive versions,
- 2- and 4-door versions, provided that these differ only with regard to the doors, door openings and B-pillar.

Models with a cylinder capacity greater than 2 litres may possibly be counted for establishing the family.

1.4 Conditions required from ASNs

The application for homologation may only be submitted to the FIA by an ASN on behalf of a manufacturer if that manufacturer has established a declaration whereby he undertakes to abide by the specifications of the homologation regulations (see Covenant for Homologation Procedure and Proxy Signature).

The declaration must be submitted to the Homologation Regulations Commission, either at its first meeting of the year or when the first application for homologation for the current year is presented.

This written declaration must be issued in the name of the manufacturer of the

必须经有关国家立法授权可以代表生产厂家的人士：或者总经理，或者董事会的负责人来签署。

通过声明，生产厂商承诺遵守国际运动总则和各项规则，包括本规则在内，以及本国国家汽车运动协会所制定的关于由该协会将生产厂商呈报的注册申请转呈国际汽联的各项规定。

如果以上任何一项规定未被遵循，国际汽联将可能根据国际运动总则第 152 条规定给与处罚。

1.5 注册申请的审核

每年，国际汽联公布注册批准程序的日程表（见 10 条）。

这个日程表包括：

- 接受申请的截止日期；
- 注册批准生效日期（见 1.6 条）；

国家汽车运动协会必须确保，根据此条规定，已经将电子申报文件（Word 或 Pdf）发往以下的 email 地址：

homologation@fia.com

或寄往以下邮政地址：

FIA Sport
Technical Department
2, chemin de Blandonnet
Case postale 296

car for which the application for homologation is submitted, and must be signed by the person(s) legally authorised in the country concerned to sign officially on behalf of the manufacturing firm, either the managing director or another responsible member of the General Management.

In making this declaration, the manufacturer pledges to abide by the International Sporting Code and all other international regulations, including the present ones, and any other complementary national regulations issued by the ASN concerned, regarding the procedure for drawing up and forwarding to the FIA all homologation applications submitted by the manufacturer.

Should any of the prescriptions not be observed, the FIA, in pursuance of Article 152, may impose any of the sanctions provided for in the International Sporting Code.

1.5 Study of homologation applications

Each year, the FIA draws up the calendar of homologation procedures (see article 10).

This calendar specifies:

- the deadlines for receipt of applications;
- the dates on which the homologations granted will come into effect (see Article 1.6).

The National Sporting Authorities must ensure that digital files (Word or Pdf) of each application are sent, in accordance with this article, to the following email address :

1215 Genève 15 Aéroport
SWITZERLAND

首先，在向上述地址发送申报之前，国家汽车运动协会应该确保，此申报材料完整无缺并符合规则要求。

每一次申请均需于第 10 条规定的日期之前送到国际汽联秘书处。

如遇误期，则将导致对于该注册批准的审验将被推迟至下一次会议进行。

为了使申报收到的日期不误期，凡是迟于国际汽联国际运动年历规定的日期收到的申报，均需交付双倍的注册费。

国际汽联技术委员会还将申报转交下列限定人员初审：

- 注册批准规则委员会
- 递交注册申报的国家汽车运动协会
- 根据国际汽联指定的生产厂商名单选定的生产厂商。

1.6 注册认证

注册批准的会议纪要注明对于已呈交的申报所提出的各项意见并通知有关的国家汽车运动协会。

对于持有保留权的注册批准，只能在国际汽联收到注册批准规则委员会认为必须向申报

homologation@fia.com
or at the following postal address :
FIA Sport
Technical Department
2, chemin de Blandonnet
Case postale 296
1215 Genève 15 Aéroport
SWITZERLAND

First of all, the National Sporting Authorities must ensure that the applications are complete and in conformity with the regulations, before dispatching them to the addresses mentioned above.

Each application must be received by the FIA Secretariat no later than the dates mentioned under Article 10.

Any delay will entail the postponement of the application until the following meeting.

To be accepted without being postponed, an application received late must be justified by the international sporting calendar of the FIA, and the homologation fees will be doubled.

The Technical Department of the FIA will make the applications available to all the persons mentioned in Appendices 4 and 5 on a reserved server with restricted access.

The Technical Department of the FIA will make the applications available on a reserved server with restricted access.

This server can be accessed by the following persons:

- The Homologation Regulations Commission
- The ASNs that forwarded the requests
- The Manufacturers, according to a list

者索取的补充信息之后的一个月的 1 日，方能予以公布。

国际汽联每月将在网站上公布新的注册批准名单会。

在接受有关的注册批准申报的会议规定的截止日期之后 6 个月内仍不能完成补充材料的申请均被取消。

此外，将对此申请者处以（当年）1000 欧元的罚款。

ARTICLE 2：注册资格

本组只接受下列在车型：在国际汽联 A 组注册，2 轮驱动，4 门，车长 4.2m 以上。

本组车型必须选自一个在连续 12 个月内产量达到 25000 的“车系”（见 1.3 条）。所有与注册的基础车型不同的零部件必须在本组注册中标出。

赛车套件装备的发动机为气缸容积不超过 1600 cm3 的增压发动机。

每家厂商在 36 个月内最多只能为一个车型（如销售名、轮距和车身基本轮廓线形）。

在此期限内，对于车系可以接受一个改进型的注册。

每一个车系只能有一个 S2000 套件注册。

ARTICLE 3：产品条件

在连续 12 个月内必须制造

drawn up by the FIA

1.6 Authentication of homologations

The minutes of the homologation meetings shall contain all the comments relating to the applications submitted and shall be communicated to the ASNs concerned.

For applications accepted with reservations, the homologation will not be pronounced until the 1st of the month following the receipt and approval by the FIA Secretariat of the supplementary information requested by the Commission.

The list of new homologations will be published every month on the FIA website.

All homologation applications not finalised within the 6 months following the application deadline for the homologation session concerned will be automatically cancelled.

Furthermore, a fine of 1000 Euros (for the current year) will be applied.

ARTICLE 2: HOMOLOGATION CRITERIA

These variants are authorised only for models homologated in Group A with 2-wheel drive, 4 doors minimum, a length of 4.2 m or over.

These models must be taken from a “family” of 25000 units produced within 12 consecutive months (see Article 1.3).

All the different parts of the homologated basic version must be mentioned in this variant.

The nominal cylinder capacity of the car equipped with the kit is limited to a maximum of 1600 cm3 with

出 3 个套件样品，并且必须能够实现在合理价格出售。

如果有此销售需求，必须能做到能够再生产 20 套此套件。

厂商出具的产品证书（车型、车系、套件改装（VK））连同本规则附录要求的样品以及 1.4 条提及的厂商签署的书面声明，最迟必须于注册规则委员会相关会议当天递交到国际汽联和国家汽车运动协会。

迟交上述材料将导致注册批准的审核延迟到下次会议。

证书必须使用法语或者英语，并且必须明确所属车型和车系。

如果现有的套件注册不能包括所有可能的零部件，则 S2000 注册表何以在后续的 12 个月内完成。

ARTICLE 4：检测和补充信息

委员会安排审查关于注册车型整车和零部件的产量以及注册申请的一致性。

至少有一名审查员必须来自由厂商委员会的运动委员会提名的审查员工作组，并且不能有与被检查车辆来自同一国家或者与生产厂商有任何形式的接触关系的审查员。

supercharged engine.

Each manufacturer may homologate no more than one kit every 36 months for each type of car (i.e. commercial name, wheelbase and general lines of the bodywork).

For the family, one evolution of the type is accepted during this period.

Only one S2000 kit may be homologated for each family.

ARTICLE 3: PRODUCTION CRITERIA

At least 3 examples of the kit must be produced in 12 consecutive months and must be available for sale at a reasonable price.

If so requested, it must be possible for 20 additional units of this kit to be made available.

The production certificates (model, family, Kit Variant (VK)), established by the manufacturer in compliance with the examples appended to the present regulations and signed by the person(s) mentioned under Article 1.4, must be received by the FIA and the ASN concerned on the day of the the Homologation Regulations Commission meeting at the latest.

Late arrival will result in the study of the application being deferred until the following meeting.

This certificate must be drafted in French or English and must specify the model and family referred to.

If the kit presented for homologation does not include all the possible parts, this form may be completed during the 12 months following the Super 2000 homologation.

审查员必须来自不同的国家。

让审查员确信申请完全符合要求始终是生产厂商责任。

如果认为对于某一种车辆或其派生的车辆有必要再次或更多次进行检测，国际汽联将要求追加额外费用。

国际汽联保留对于现有的注册进行审查的权利，并可要求生产厂商提供补充信息。一旦确定申报有错，国际汽联可以暂停或者取消有关的注册批准，并对有关的生产厂商进行其他处罚，诸如在规定的期限内拒绝该生产厂商的其他申报，追加罚款等等。

从审查到注册之间必需的日程间隔最少是 1 个星期。

ARTICLE 5：注册表

国际汽联已经印制法文版的和英文版的注册表，每个国家汽车运动协会可以向国际联合会索取，国际汽联随即寄送，只收少额费用。

每个国家汽车运动协会有权印刷自己的法文版，英文版和本国文字版的注册表。这种报表的样本必须事先经过国际汽联审核，方可被国际汽联接受。任何不符合国际汽联的国际样式

ARTICLE 4: CHECKS AND ADDITIONAL INFORMATIONS

The Commission will arrange inspections concerning the number of cars and sets of parts manufactured and their conformity with the application for homologation.

At least one inspector must be from the Panel of Inspectors nominated by the Sporting Committee of the Manufacturers' Commission and no inspector shall be from the same country as the car being inspected or in any way connected with its manufacturer.

The inspectors must be from different countries.

The onus shall at all times be on the manufacturer to satisfy the inspectors that the application is in order.

The FIA may charge an additional fee should more than one inspection be deemed necessary in respect of a car or its extension.

The FIA reserves the right to check existing homologations, and can thus ask the manufacturers for additional information. Where it can be established that false declarations have been made, the FIA may suspend and/or cancel the homologation concerned and impose other sanctions on the manufacturer concerned, such as the refusal to consider other homologation applications for a given period, the imposition of a fine, etc.

A minimum delay of one week between the inspection and the homologation must be respected.

的申报表均不予承认。

可以使用申报国家的文字填写申报表，但是必须附上所有数据的法文或英文的译文。

所有的尺寸均应使用公制单位，除了车轮参数。

某些在空白注册表中明确列出的关于发动机的信息，如果被认为需要保密（由厂商决定）；可以另行注册在一份为此保留的特殊注册表上。

这份保密注册表与官方注册表具有同等法律效力；但是不会被国际汽联发布。

ARTICLE 6：委员会对于注册批准申报表的更正

如果委员会发现某一种已经申报的车型的注册批准申报表中包含的技术数据不正确，或者与附则 J 或本规则的规定不符，则此申报表必须按照委员会的指示加以更正。

更正将于下一个月的 1 日起生效。

所有明显的但是与实际表现无关的错误可能由国际汽联秘书处直接加以更正。

ARTICLE 7：改装的技术限制

7.1 以下的零件可以套件的形式注册：

ARTICLE 5: HOMOLOGATION FORMS

The FIA has printed the homologation form in French/English, and each ASN may order copies of this form, which will be sent in return for a small charge.

However, each ASN has the right to have its own homologation form printed, worded in French or English plus the language of the country concerned. These forms will be accepted only after ratification by the FIA. Any homologation form which does not comply with the International FIA model will not be recognised.

The homologation form may be filled in in the language of the country concerned, but must include a French or English translation of all the data.

All dimensions must be given according to the metric system, apart from the wheel measurements.

Certain information concerning the engine, clearly identified on the blank homologation form, is considered confidential and can be homologated separately (at the manufacturer's discretion) on a form specifically reserved for that purpose.

This confidential form has the same validity as the official homologation form, but will not be distributed by the FIA.

ARTICLE 6: CORRECTION OF A HOMOLOGATION FORM BY THE COMMISSION

Should the Commission find that a homologation form contains specifications which are inaccurate or do not comply with the prescriptions of

改装套件必须完整的使用。

- 总长 - 轴距

总长、轴距和前后悬长度相对于注册的原型车的尺寸的容差不能超过 10mm 。

如果注册的原型车的前悬是部分由车身构成的，且这部分车身所在的位置是允许改装的区域（参见第 7.1.6 条），则总长和前悬的测量方法为取必须保留原型区域和可以改装区域的之间部分上方的前沿（参见第 7.1.6 条）。

7.1.1 发动机

在所有情况下，一经注册，包括进排气在内的发动机整体（所有部件为Kit Variant 所确认）必须提交至 FIA 处。

在所有情况下，发动机必须符合：

- 完全符合发动机的制造规则

- 或完全符合发动机附件的规则。

- 材料

除非另有说明，所有下面提到的部件的材料和热处理必须与附件中的规则相符。

磨损件的表面涂层：钛基（TiN）涂层可以接受（最大厚度 5 微米）。

Appendix J or the present regulations, this form must be corrected as instructed by the Commission.

The correction will be valid as from the 1st of the following month. All obvious errors having no connection with performance may be corrected directly by the Secretariat of the FIA.

ARTICLE 7: TECHNICAL LIMITATIONS OF THE MODIFICATIONS PRESENTED

7.1 The following parts may be homologated in kits:

The use of the Kit Variant in its entirety is obligatory.

- Length - wheelbase

The tolerances on the length, wheelbase and overhangs are reduced to 10 mm in relation to the homologated basic model.

If the front overhang of the basic model is formed by the part of the bodywork situated within the area where modifications are permitted (see Article 7.1.6), the reference length and reference overhang aremeasured above the frontier between the area that must remain series and the area that may be modified (see Article 7.1.6).

7.1.1 Engine

In all cases, upon homologation, a complete engine (i.e. all the engine parts homologated in Kit Variant) with the intake and exhaust manifolds must be deposited with the FIA.

In all cases, the engine must be in conformity:

- either entirely with the rules imposed for the engine of the make

– 发动机缸体，缸盖和油底壳

在所有情况下，发动机只能有四个缸。

机加工的缸盖，缸体和油底壳必须注册。

缸盖罩必须注册。

如果曲轴轴承座（下半部分）是可拆除的并且相对于下油底壳是独立的，其必须注册。

产品发动机：

在下述条件下，该发动机可被认为基准发动机：

– 在连续的 12 个月中至少有生产了 25000 台完全一样的发动机。可以计算其他制造商生产的数量，但是必须证明他们所装备的是完全一致的发动机，并且在连续的 12 个月中生产了至少 5000 台。

– 制造商可以在达到总产量要求前获得一个暂时的认可，需满足以下要求：

– 装备此款发动机的车辆在市场正常销售。

– 总产量要在当年锦标赛最后一场开始前达到。

– 满足所有其他相关的要求。

– 外支撑的形状和位置的改变仅当有完全一样的 5000 台

- or entirely with the rules imposed in the engine appendix.

- Material

Unless stated otherwise, the material and the treatment of all the parts mentioned below must be in conformity with the regulations in appendix.

Coating for wearing parts: a titanium-based (TiN) coating is accepted (maximum thickness 5 micrometres).

- Engine block, cylinder head and sump

In all cases, the engine must have only 4 cylinders.

The machined cylinder head, engine block and oil pan must be homologated.

The cylinder head cover must be homologated.

The crankshaft bearing caps (lower half-bearings) must be homologated if they are removable and independent of the lower oil sump.

Engine of the make:

An engine may be used as a basic engine on the following conditions:

- At least 25000 identical units must have been produced in 12 consecutive months. It is possible to count models from another manufacturer, provided that they are equipped with the same engine (strictly identical) and produced in a quantity of at least 5000 units in 12 consecutive months.

- Manufacturers have the possibility of obtaining a temporary homologation before the total production for definitive homologation has been reached, provided that:

- cars of the considered model are freely

被制造后才能被允许。

产品发动机强制要求

与附则中的规则要求一致，缸径、缸心距或另有规则说明的除外。

对于产品发动机：

- 最大缸径 84mm 。

- 重镗与加缸套更换是允许的，但是缸套必须是圆截面并且与气缸同轴，干湿均可且可以各不相同。

- 发动机重量和重心

在所有情况下，发动机必须符合下列条件：

- 根据附录规则 3.2 条的定义的发动机重量，必须≥82kg。

- 重心位置在垂直方向上，要求在曲轴中心线上方≥110mm（水平对置发动机除外）。

对于产品发动机缸体和缸盖的重量不受附录中的限制(缸体：20kg，缸盖：13kg）。

- 发动机位置

在发动机舱内，发动机可以移动，只要不修改各种壁面且曲轴轴线任何一点位移都没有超过 25mm。

在横置发动机的情况下，沿着曲轴轴线，发动机可自由移动以调整传动装置。

on sale to customers

- the complete production is achieved before the start of the last event in the Championship of the current year

- all the other requirements relating to the homologation are fulfilled.

- External variations of the position and the shape of the supports are authorised on condition that at least 5000 strictly identical units are built.

Conditions imposed on the engine of the make:

Identical to the conditions imposed by the regulations in appendix, except for the bore and the distance between the axes of the cylinders and unless indicated otherwise in the present regulations.

In the case of an engine of the make:

- the maximum bore is 84 mm.

- Reboring, sleeving and resleeving are authorised, but the sleeves must have a circular internal section and be concentric with the cylinders, dry or wet and distinct from one another.

- Weight of the engine and centre of gravity

In all cases, the engines must comply with the following conditions:

- Weight of the engine, according to Definition 3.2 of the regulations in appendix ≥ 82 kg.

- Centre of gravity in a vertical direction above the centre-line of the crankshaft ≥ 110 mm (except for Boxer type engines).

For engines of the make, the engine block and the cylinder head are not subject to the weight limits (engine

用于测量 25mm 的参考点是在发动机缸体和变速箱之间的接口的平面。

以下情况是允许的：

- 或保持发动机原有的倾斜角。

- 或发动机绕其曲轴旋转最多 25°

- 发动机支架

发动机支架必须注册。

其安装位置必须注册（其可能相对原车型有所修改）。

其必须满足以上所示要求。

不允许相对原车型增加支架。

- 缸体

对于产品发动机，以下是可行的：

- 从毛坯件开始加工

- 使用系列工具改装毛坯件的材料，内核材料不限。

- 只要能证明其为原始部件，可任意机加工。

所有机加工必须能够使用三轴机床加工出。

发动机缸体和缸盖可以来自不同的发动机，但需证明其遵守产品发动机的规则。

- 活塞

活塞必须注册。

最大压缩比为 12.5/1。

block: 20 kg, cylinder head: 13 kg) specified in the engine appendix.

- Engine position

The engine may be moved in its compartment in relation to the model considered, as long as this does not modify the various walls and no point of the crankshaft axis between its extremities is moved by more than 25 mm.

Following the crankshaft axis, the engine may be moved freely to adjust to the transmission, only in the case of a transverse engine.

The reference point used to measure the 25 mm is the plane between the interface of the engine block and the gearbox.

It is permitted:

- either to retain the angle of inclination of the engine in its original compartment
- or to tilt the engine by a maximum of 25° to the vertical around its crankshaft.

- Engine mountings

The engine mountings must be homologated.

Their location must be homologated (it may be modified relative to that of the series car).

They must respect the conditions defined in the article above.

It is prohibited to add engine mountings relative to the series car.

- Engine block

In the case of an engine of the make, it is possible to:

- begin from the raw series components
- modify the material of the raw components using the series tooling, the

- 活塞销，外径≥21.9mm
- 活塞压缩高度≥32.0mm

每个活塞必须三个活塞环，每个最小厚度分别为 0.92mm，1.12mm，1.92mm。

活塞最少重量（包括活塞销，油环和器环）为 400g。

活塞销衬套：可用青铜合金或钢制造

- 连杆

连杆必须注册。

螺栓可用钴或镍合金制成。

衬套和轴瓦（bushes）可用青铜合金。

最小重量（包括衬套、轴瓦和螺栓）为 450g。

- 曲轴

曲轴必须注册。

曲轴轴承的直径和轴瓦宽度，以及曲轴销必须保持原样或者根据以下原则增加。

- 轴承直径≥54.9mm
- 轴瓦宽度≥20.0mm
- 曲轴销≥45.9mm
- 连杆大头轴瓦宽度≥20.0mm

整个待装配的完备的曲轴最小重量为 12000g：

如果使用的是原产曲轴且重量小于 12000g，那么曲轴加飞轮（包括固定螺丝和起动齿）

cores are free,

- machine at will, as long as their origin can be proved.

Any machining must be able to be done with a 3 axis machine.

The engine block and cylinder head may come from different engines, provided that the criteria imposed on engines of the make are respected.

- Piston

The piston must be homologated.

The maximum compression ratio is 12.5/1.

- Piston pin, outer diameter ≥ 21.9 mm
- Compression height of piston ≥ 32.0 mm

Each piston must have at least 3 rings of 0.92 mm, 1.12 mm, 1.92 mm minimum thickness.

The minimum weight of a piston (with pin, spring-ring and rings) is 400 g.

Rings Bushes for the piston pin: these may be made from Bronze Alloy or from steel.

- Connecting rods

The connecting rod must be homologated.

Screws may be made from Cobalt or Nickel alloy.

The bushes may be made from Bronze alloy.

The minimum weight with bushes and screws is 450 g.

- Crankshaft

The crankshaft must be homologated.

The diameters and the bushing widths of the crankshaft bearings and pins must remain original or be increased

的最小重量为 15000g。

– 飞轮

飞轮最小重量（含固定螺丝和启动齿圈）为 3000g。

必须单体制造，除了启动齿圈可以焊接。启动齿圈最小直径为 250mm，并且其必须坚固牢靠地固定在飞轮上。

其厚度（沿旋转轴方向的最大尺寸）不能超过 45mm。

只允许使用钢材。

– 缸盖

对于产品发动机，以下是可行的：

– 从毛坯件开始加工

– 使用系列工具改装毛坯件的材料，内核材料不限。

– 只要能证明其为原始部件，可任意机加工。

– 除了燃烧室和缸盖的铝气道，任何机加工必须能够用 3 轴机床完成。

– 将非直喷缸盖转为直喷缸盖，但气门的角度和正时的类型（凸轮机构）必须保持不变。

发动机缸体和缸盖可以来自不同的发动机，但需证明其遵守产品发动机的规则。

– 喷油系统

喷油系统可以自由设计。

最大喷油嘴的数量同气缸

according to the following prescriptions.

- Bearing diameter≥ 54.9 mm
- Bearing bush width≥ 20.0 mm
- Crankpin diameter≥ 45.9 mm
- Connecting rod bush width≥20.0 mm

The minimum weight of the complete crankshaft ready to install is set at 12000 g :

If the series crankshaft is used and its weight is less than 12000 g, the minimum weight of the crankshaft + engine flywheel assembly (with fixation screws and starter crown) is 15000 g.

- Flywheel

The minimum weight of the flywheel (with fixation screws and the starter crown) is 3000 g.

It must be made in one piece, with the exception of the starter crown, which may be welded, its minimum diameter is 250 mm, and it must be firmly secured to the engine flywheel.

The thickness (overall dimension over the rotation axis) must not be more than 45 mm.

Only steel is authorised.

- Cylinderhead

In the case of an engine of the make, it is possible to:

- begin from the raw series components
- modify the material of the raw components using the series tooling, the cores are free,
- machine at will, as long as their origin can be proved.

Except for the cylinder head chamber and the aluminium ports of the cylinder head, any machining must be able to be done with a 3 axis machine.

数量相同。

任何喷水系统都是不允许的。

喷油嘴

汽油直接喷射为强制使用，并且必须遵守附录的规则。

汽油回路的任意一点，低压油路的压力不能高于 8 bars，高压油路中单次循环平均不能超过 200 bars（仅限于直喷）。

喷油器体必须来自制造商的商用产品目录，并且能够购买到。

只有电磁喷油器是允许的。

喷油器必须通过 FIA 批准和并注册。

只有雾化状态调节器的数值和位置可以改变。

- 发动机电控系统

禁用任何电子辅助驾驶系统（ABS/ASR/EPS…）。

电控单元（ECU）和执行器必须注册。

ECU 的软件必须通过 FIA 批准和并注册。其必须包含不能被选手更改的转速限制（最大转速 8500 rpm）。

发动机最大转速控制可以根据所使用齿轮比进行调整。

任何对软件的改动，除了每个赛历年和必要的修改程序错

- transform a non-direct injection cylinder head into a direct injection cylinder head, but the angle of the valves and the type of timing (tappet, cam follower…) must be kept.

The cylinder head and engine block may come from different engines, provided that the criteria imposed on engines of the make are respected.

- Injection system

The injection system is of free design.

The maximum number of injectors is equal to the number of cylinders.

Any water spraying system is prohibited.

Injectors

Direct petrol injection is mandatory and must respect the Regulations in appendix.

At any point of the fuel circuit, the maximum pressure authorised is 8 bars in the low pressure circuit and 200 bars average on one cycle in the high pressure circuit (direct injection only).

The body of the injector must come from a Manufacturer's commercial catalogue and be available for purchase.

Only solenoid injectors are allowed.

The injectors must be approved by the FIA and homologated.

Only the values and positions of the spray pattern adjusters may be modified.

- Engine electronic control system

Any electronic driving aid system is prohibited (ABS / ASR / EPS …).

The electronic control unit (ECU) and actuators must be homologated.

The electronic unit of the data logging system must be homologated in VO.

误外（留交 FIA 鉴别），都属于“特许变更（ Joker ）”（参见 7.2 条）。

在注册的第一年，允许有一次不被视为特权变更的补充修正。

传感器：

只有以下传感器可以注册并且用在 ECU 策略中：

- 节气门位置（2 个）
- 油门踏板位置（2 个）
- 曲轴位置（1 个）
- 凸轮轴位置（1 个）
- 发动机机油压力（1 个）
- 水温（1 个）
- 发动机机油温度（1 个）
- 燃油温度（1 个）
- 换挡开关(切断点火或喷油）
- λ 传感器（2 个）
- 大气温度（1 个）
- 进气温度（1 个）
- 大气压力（1 个）
- 增压压力（1 个）
- 涡轮转速（2 个）
- 废气泄压阀传感器（1 个）
- 压力传感器或空气喷射系统位置传感器（1 个）
- 排气温度（1 个）
- 燃油压力（2 个）

The software of the ECU must be approved by the FIA and homologated. It must include a rev. limiter which cannot be modified by the competitor, and which guarantees a maximum engine speed of 8500 rpm.

The control of the maximum engine speed may be adapted according to the gear engaged.

Any modification to the software, except for one per calendar year and modifications necessary for the correction of programming errors (left to the appreciation of the FIA), will be the subject of a "Joker" (see Article 7.2).

During the first year of homologation, a supplementary modification without a joker is authorised.

Sensors

Only the following sensors may be homologated and used in ECU strategies.

- Throttle position (number: 2)
- Throttle pedal position (number: 2)
- Crankshaft position (number: 1)
- Camshaft position (number: 1)
- Engine oil pressure (number: 1)
- Water temperature (number: 2)
- Engine oil temperature (number: 1)
- Fuel temperature (number : 1)
- Gear cut switch (cutting the injection and/or ignition)
- Lambda probe (number: 2)
- Ambient air temperature (number: 1)
- Intake air temperature (number: 1)
- Ambient air pressure (number: 1)
- Boost pressure (number: 1)
- Turbo speed (number: 2)
- Waste-gate sensors (number: 1)

- 爆震传感器（4 个）
- 水压（1 个）
- 涡轮压力（压气机出口）（1 个）
- 变速箱档位
- 制动压力
- 手刹压力
- 方向盘扭矩(电子助力转向)
- 方向盘位置和速度(仅助力转向)
- 车速（霍尔效应或磁感应）（仅 FIA 授权策略用）

执行器：

只有以下的执行器可以注册并且他们必须通过 ECU 控制（直接或通过 CAN）：

- 燃油泵
- 喷油器（4 个）
- 点火线圈（4 个）
- 燃油压力调整期(如果为电驱动)
- 废气阀
- 机油泵
- 水泵
- 电子节气门
- 排气二次进气系统
- 风扇
- 电助力转向单元
- 任何电子执行器,除了车灯和可见功能件（雨刮，挡风玻

- Pressure sensor or air injection system position sensor (number: 1)
- Exhaust gas temperature (number: 1)
- Fuel pressure (number: 2)
- Knocking detector (number: 4)
- Water pressure (number : 1)
- Turbo pressure (compressor exit) (number: 1)
- Gearbox position
- Brake pressure
- Handbrake pressure
- Steering wheel Torque (for electric Power Steering)
- Steering wheel position and speed (for power steering only)
- Car speed (Hall effect or inductive) (FIA authorised strategies only)

Actuators

Only the following actuators may be homologated and they must be controlled by the ECU (direct or via CAN):

- Fuel pumps
- Injectors (number: 4)
- Coils (number: 4)
- Fuel pressure regulator if electronically driven
- Waste-gate
- Oil pump
- Water pump
- Electric throttle
- System for injection of air into the exhaust manifold
- Fans
- Electric power steering unit
- Alternator charge control system
- Any electric actuator except lightning and visibility functionalities (wiper, windscreen heater,…)

璃加热器...）

– FIA 数据采集系统

每辆车都必须装备 FIA 数据采集系统用以记录：

– 增压值（2 个传感器）

– 油轨压力（高压）

– 发动机转速（曲轴转速）

– 单个后轮转速

– 单个前轮转速

– 分圈信号器

– 侧向和纵向加速度计，以及 GPS 数据，来自内置于 FIA 数据采集仪的传感器。

所有数据通过 CAN 总线输入 ECU。

涡轮增压压力传感器安装参见工程图 n° 4。

以下数据从 ECU 经由 CAN 总线传至 FIA 数据记录仪：

– 油门踏板位置

– 进气歧管温度

– 节气门位置

– 大气压力

– 涡轮转速

– 空燃比

– 档位

– 后轮制动压力

– 手刹压力

– 策略类型信息（ECU 的策略状态）

任何 FIA 认为必须的信息

- FIA Data acquisition

Each car must be equipped with an FIA data acquisition system in order to measure:

- the supercharged air pressure (2 sensors),
- the rail fuel (HP) pressure,
- the engine speed (crankshaft speed),
- the speed of a rear wheel,
- the speed of a front wheel,
- "lap beacon"
- the lateral and longitudinal accelerations, and the GPS data, by means of sensors integrated into the FIA data acquisition system.

All these data are sent to the ECU via CAN line.

Installation of the supercharged air pressure sensor: see Drawing n°4.

The following information are sent from the ECU to the FIA datalogger via CAN line:

- Throttle pedal position
- Intake manifold air temperature
- The position of the throttle,
- Ambient air pressure
- Turbocharger speed
- A/F ratio
- Gear position
- Rear brake pressure
- Handbrake pressure
- Stage mode information.

Also, any information deemed necessary by the FIA may be added.

The FIA data acquisition system is considered as forming an integral part of the kit; as such, it is mandatorily installed in its entirety for FIA events.

- Camshaft

也都可能增加。

FIA 数据采集系统被认为是整套配件的一部分；因此，其必须在整个 FIA 赛事中强制安装。

- 凸轮轴

凸轮轴必须注册。

凸轮轴可以是任意的，但是凸轮轴数量要保持不变。

轴承的数量和直径相对原型车型必须保持不变。

如果其直径被更改了，其必须大于 27.9mm。

单个最小质量为 1.2kg

如果水平对置的产品发动机的凸轮轴注册，那么要求：

- 2 个进气凸轮轴的最小质量为 1.2kg。

- 2 个排气凸轮轴的最小质量为 1.2kg。

- 气门正时（升程规则和气门升程）

可变正时系统禁止使用。

如果原型车装备了可变正时系统，那么其必须被移除或者屏蔽，并且必须附上一份其无效的说明。

气门升程，如注册表中 326c 条所定义，允许更改，但必须不超过 12mm（无间隙情况下的最大值）。

The camshaft must be homologated.

The camshaft(s) is/are free, but the number of shafts must be retained.

The number and diameter of the bearings must remain unchanged compared with the series part.

If its diameter is modified, it must be greater than 27.9 mm.

Its minimum unitary weight is set at 1.2 kg.

If new camshafts are homologated for a "Boxer" type engine of the make:

- the minimum weight of the 2 intake camshafts is set at 1.2 kg.

- the minimum weight of the 2 exhaust camshafts is set at 1.2 kg.

- Valve timing (lift rule and valve lift)

Variable timing systems are prohibited.

If the series car is so equipped, they must be rendered inoperative through dismantling or blocking and an explanation of its deactivation must be given.

The valve lift, as defined in article 326c of the homologation form, may be modified, but must not exceed 12 mm (this is a maximum with no tolerance).

If the series car is homologated with greater lift, the camshaft must be modified so that the lift does not exceed the above dimensions.

The cam lift as defined in Article 326b of the Homologation Form must be homologated.

The cam dimensions as defined in Article 325g of the Homologation Form must be homologated.

Tappets / Rocker arms / Cam followers

These must be homologated under the

如果原型车注册为更大升程，那么凸轮轴必须更改，使得不超过以上要求的尺寸。

凸轮升程如注册表中 326b 条所定义，必须注册。

凸轮尺寸如注册表中 325g 条所定义，必须注册。

挺柱/摇臂/凸轮从动件

这些必须在满足以下要求的情况下注册。

挺杆的直径以及挺杆和摇臂的形状不限，但摇臂必须能与原厂件互换。

- 正时带/链

正时带/链必须注册。

- 进气歧管

根据 251-2.3.4 条定义。

可变进气歧管是不允许的。

进气歧管必须是个单阀式的，节气门开口处最大内径不超过 50mm。

复合材料（包括碳纤维）允许使用，但须是防火的。

如果单阀模块是自由设计的，其必须为机械控制，整根节气门轴的直径不能小于 9.95mm 并且阀门保证同一厚度。

如果单阀体来自在 A 组注册的原型车（即 2500 台），无论是厂商自制还是采购，都可以机械控制或者电控。

following conditions.

The diameter of the tappets and the shape of the tappets and rocker arms are free, but the rocker arms must be interchangeable with the original ones.

- Timing belts and/or chains

The timing belts and/or chains must be homologated.

- Intake manifold

Definition cf. Art. 251-2.3.4.

Intake manifolds with variable geometry are prohibited.

The intake manifold must be a single-valve manifold with a maximum diameter of 50 mm at the throttle valve opening.

The use of composite material (including carbon fibre) is authorised, provided that it is fire-retardant.

If the single-valve unit is of free design, it must be mechanically controlled, the diameter of the throttle shaft (spindle) must not be less than 9.95 mm along its whole length and the valve must be of a constant thickness.

If the single-valve housing comes from a model of car that can be homologated in Group A (i.e. 2500 units), whatever the make, or is available for purchase, it may be mechanically or electrically controlled.

In case of an electric throttle, only the reinforcement of the electrical connections and the changing of the sensor(s) are authorised.

The throttle spindle may be retained, even if its diameter is less than 9.95 mm over its entire length.

A local modification to the outside of the

对电控节气门，只允许加强电气连接或者更换传感器。

节气门轴可以保留，即使其整根直径小于 9.95mm。

对于节气门体的局部修改是允许的，但限于修改其与进气管的连接（用以提高其连接强度）的层次。

所有进入发动机的空气必须通过节气门体。

进气歧管的容积不能超过 12L。

详细的进气歧管系统工程图必须同注册表一同提交。

装备节气门体和 FIA 压力测量管的进气歧管系统的最小质量为 3kg。

可以整合一个机械泄压阀，条件是仅能向大气排气。

- 气门（进气）

进气门必须注册。

对于四气门的发动机，进气和排气门必须注册，并且必须遵照附录中规定的所有要求。

如果进气门直径小于 35mm，可以注册一个新的直径，只要该直径不超过 35mm 并且比注册原型扩大不超过 1mm。

- 排气歧管

可变排气歧管是不允许的。

排气系统的管壁厚度必须

housing is permitted at the level of the connection with the charge pipe in order to improve its retention.

All air entering the engine must imperatively pass through the throttle opening.

The volume of the intake manifold must be less than 12L.

A detailed drawing showing the intake manifold must be supplied with the homologation form.

The minimum weight of the manifold equipped with the throttle housing and the FIA pressure measuring tube is set at 3 kg.

It is possible to integrate a mechanical pressure relief valve, provided that this valve discharges only into the atmosphere.

- Valves (intake)

They must be homologated.

For engines with 4 valves per cylinder, the intake and exhaust valves may must be homologated and must respect the Regulations in appendix on all points.

If the diameter of the intake valves is less than 35 mm, it is possible to homologate a new diameter, provided that this diameter does not exceed 35 mm and that it is no more than one millimetre greater than that of the homologated model.

- Exhaust manifold

Exhaust manifolds with variable geometry are prohibited.

The thickness of the pipes used for the exhaust manifold must be greater than or equal to 1.1 mm, measured in the uncurved parts.

大于等于 1.1mm，在非弯曲处测量。

排气系统可由铬镍铁合金制成。

– 气门（排气）

排气门必须注册。

对于四气门发动机，进气和排气气门必须注册，并且必须遵照附录中规定的所有要求。

如果排气门直径小于 31mm，可以注册一个新的直径，只要该直径不超过 31mm 并且比注册原型扩大不超过 1mm。

气门杆直径可以增加。

– 水泵

对于产品发动机缸体：

水泵和新的驱动系统需要注册，只要其来自在 A 组注册的原型车，无论是厂商量产（即 2500 台），或者来自一份分散的产品目录。

水泵的中心线必须位于发动机舱内，在曲轴中心线以上或在原先位置以上。

在缸体满足附录规则的情况下，水泵可以是任意的，但必须注册。

– 机油泵

机油泵必须注册。

干式润滑系统是允许的。在这种情况下，回油泵必须注册，

The exhaust manifold may be made from Inconnel.

- Valves (exhaust)

They must be homologated.

For engines with 4 valves per cylinder, the intake and exhaust valves may must be homologated and must respect the Regulations in appendix on all points.

If the diameter of the exhaust valves is less than 31 mm, it is possible to homologate a new diameter, provided that this diameter does not exceed 31 mm and that it is no more than one millimetre greater than that of the homologated model.

The diameter of the valve stem may be increased.

- Water pump

In the case of an engine block of the make:

A water pump and a new drive system may homologated, provided that these come from a model of car homologated in Group A, whatever the make, (i.e. 2500 units), or from a widely-distributed catalogue.

The centre-line of the water pump must be situated in the engine bay, above the centre-line of the crankshaft or above the original position.

In the case of a block in compliance with the regulations in appendix, the water pump is free but must be homologated.

- Oil pumps

The oil pump must be homologated.

Lubrication by dry sump is allowed. In this case, the scavenge pumps must be homologated and the new oil pump must be external to the block.

并且新的机油泵必须在缸体外。

原型车的机油泵在其原有的位置仍适用，则可保留。

可以注册一个新的下油底壳。如果必须的话其可以替换曲轴的下半轴承。

可以注册一个机油泵和新的驱动系统，只要其来自在 A 组注册的原型车，无论是厂商量产（即 2500 台），或者能够购买到。

允许在油路中增加预置的用于冷却活塞的阀门。

允许通过发动机外置油路来增强缸盖和油底壳之间的机油循环。

这些改动必须注册。

使用干式油底壳的情况下，机油箱（形状，容量…）必须注册。其必须安装在发动机舱。

如果使用干式油底壳，允许切除发动机舱内的部分隔板来安装机油箱。

无论如何，这些切除仅限于为了安装所必须切除的部分，并且机油箱和有关油路必须在驾驶舱外。

这些切除和改动必须注册

在任何情况下都不允许改变驾驶舱侧的隔板。

– 储油罐

The series oil pump, fitted in its original location and position, may be kept.

A new lower sump may be homologated. It may replace the crankshaft lower half-bearings if necessary.

An oil pump and a new drive system may be homologated, provided that these come from a model of car that can be homologated in Group A, whatever the make (i.e. 2500 units), or are available for purchase.

The addition of oil lines with pre-set valves for cooling the pistons is authorised.

It is possible to improve the oil circulation between the cylinder head and the sump by means of lines external to the engine. These modifications must be homologated.

In the case of a dry sump, the oil tank (shape, capacity…) must be homologated. It must be installed in the engine compartment.

If a dry sump is used, it is possible to cut out part of the bulkhead situated in the engine bay in order to install the oil tank. However, such cut-outs must be strictly limited to the parts necessary for this installation, and the oil tank and the associated oil lines must remain outside the cockpit.

These cut-outs and modifications must be homologated.

Under no circumstances may the cockpit side of the bulkhead be modified.

- Oil accumulator

An oil pressure reservoir in the engine

允许机油储压器用于发动机润滑系统。其最大容积为 3L。

– 涡轮增压器

涡轮增压只能有一个增压器，只有一级压缩和膨胀，并且不允许可变通道和可变几何形状。

其特性和尺寸在“涡轮增压器”附录中注明。

其必须为 FIA 认证，满足附录 4 中的精确描述并且注册。

其最大增压值和法兰尺寸在技术规则（附录 J-263）中规定。

涡轮增压器中的任何旋转件（轴承滚动部分除外）都不能使用陶瓷或陶瓷涂层。

对于压气机外的局部修改（机加工、附加套）是允许的，但仅限于加强空气出口处与气管连接的强度的程度，或是安装速度传感器。

润滑：增加内部油路和/或更改原油路调整走向是允许的。

涡轮增压器通过认证的标准：

在被列入通过 FIA 认证的涡轮增压器列表前，其必须经 1.6L 涡轮增压发动机技术工作组中大多数的厂商批准。

– 废气泄压阀

lubrication system is authorised. Its maximum capacity is 3 litres.

- Turbocharger

The turbocharger must be single turbocharger, with single stage compression and expansion, and must not have variable pitch or variable geometry.

Its characteristics and dimensions are indicated in the "Turbocharger" Appendix.

It must be approved by the FIA, satisfy the precise specifications in appendix 4 and be homologated.

The maximum supercharged air pressure and the diameter of the flange are specified in the Technical Regulations (Article 263 of Appendix J).

No turning part of the turbocharger (except the rolling parts of the bearings) may be made from ceramic or have a ceramic coating.

Local modifications (machining and/or addition of a sleeve) to the outside of the compressor housing are permitted at the level of the air outlet in order to improve the connection with the charge pipe, and to install a speed sensor.

Lubrication: The addition of internal oil lines and/or the modification of the original oil lines for adjusting the flow are permitted.

Criteria for the approval of a turbocharger:

Before being added to the list of turbochargers approved by the FIA, the turbocharger must have been approved by the majority of the Manufacturers forming part of the 1.6 Turbo engine

可以注册一个废气泄压阀，只要其来自在 A 组注册的原型车，无论是厂商量产（即 2500 台），或者能够购买到。

废气阀可以是整合到涡轮增压器上，也可以不整合。

– 中冷器

中冷器必须为空/空式。

中冷器可以自由设计，但是有以下限制：

– 其必须放置在发动机舱。

– 空空中冷器有最大的换热芯容积 V1max 为 8dm3。

– 中冷器芯最多有六个平面。

其换热芯的总容积通过其外尺寸测量（长度*宽度*厚度）。

换热芯必须来自 N 组注册的发动机，或者获得 FIA 批准（换热芯最高价格：2000 欧元，不含税）。

换热器允许安装风扇，但风扇必须 VO 注册。

– 空气喷射

可以注册一整套空气喷射系统，条件是：

– 经 FIA 批准

– 来自 N 组注册车型的发动机（EGR 型号）或可以采购到

– 整套系统的最高价格（不含电磁阀）为税前 1500 欧元。

Technical Working Group.

- Waste Gate

A waste gate may be homologated, provided that it comes from a model of car that can be homologated in Group A (2500 units), whatever the make, or that it is available for purchase.

The waste gate may or may not be integrated into the turbocharger.

- Intercooler

The intercooler must be of the air/air type.

The intercooler is free but with the following limitations:

- It must be mounted in the engine compartment.
- The air/air intercooler must have a maximum interchanger core volume V1max of 8 dm3.
- The interchanger core must have a maximum of six flat faces.

The total volume of the core is determined by its external dimensions (Length x Width x Thickness).

The interchanger core must come from an engine that can be homologated in Group N, or be approved by the FIA (maximum price of the interchanger core: 2000 Euros excluding tax).

The fitting of fans on the exchanger is authorised but the fans must be homologated in VO.

- Injection of air

A complete system may be homologated, provided that :

- it is approved by the FIA
- it comes from an engine that can be homologated in Group N (type EGR …) or that it is available for purchase

空气喷射系统通过认证的标准：

在被列入通过 FIA 认证的空气喷射系统列表前，其必须经 1.6L 涡轮增压发动机技术工作组中大多数的厂商批准。

- 油箱

必须来自 FIA 认可的制造商（最低标准为 FIA FT3 1993）。油箱必须注册。

- 燃油泵

高压油泵必须：

- 通过 FIA 认证且注册（不允许更改，必须同发动机一起提交至 FIA）
- 外轮廓线型必须注册
- 来自商业产品目录
- 能采购到
- 启动电机

启动电机的位置必须注册（要娶妻必须在发动机舱内）。

沿曲轴中心方向其与发动机飞轮的距离不能超过 400mm。

不允许使用交流启动电机。

7.1.2 传动装置

- 变速箱操纵装置

接触器和量载规可以在换挡的瞬间切断发动机动力。

操纵装置必须由铁质材料或者铝合金制成，连接没有限制。

- the maximum price of the complete system (without solenoid valve) is 1500 Euros before tax.

Criteria for the approval of an air injection system:

Before being added to the list of systems approved by the FIA, an air injection system must have been approved by the majority of the manufacturers forming part of the 1.6 Turbo engine Technical Working Group.

- Fuel tank

It must come from an FIA-approved manufacturer (FIA FT3 1999 minimum specifications). This fuel tank must be homologated.

- Fuel pump

The high pressure pump must:

- be approved by the FIA and homologated (no modification authorised, must be deposited with the FIA along with the engine)
- the cam profile must be homologated
- come from a commercial catalogue
- be available for purchase.

- Starter

The position of the starter must be homologated (provided that it remains inside the engine bay).

It must be no more than 400 mm from the engine flywheel along the crankshaft centreline.

Alterno-starters are forbidden.

7.1.2 Transmission

- Gearbox control

Contactors or loading gauges allowing the engine to be cut at the moment of the gear change are authorised.

The control must be made of ferrous

– 变速箱

变速箱必须用序列操纵形式。

禁止使用钛合金、陶瓷、镁合金、复合材料和增强玻璃纤维材料，除非涉及此问题的零件材料与原装零件材料一致。

变速箱的支架必须注册。

在发动机缸体和变速箱之间可以安装转接器。

变速箱必须含有最多有 6 个前进挡和 1 个倒档，壳体必须由铝合金制成。

整个变速箱的最小重量限制（不包括支架，润滑油，离合器，外部操纵机构和半轴）：

– 带整合差速器的为 35kg

– 没有差速器的为 30kg

整个变速箱的价格必须少于 2 万欧元。

可以注册 2 套传动比，每套包括 6 个前进挡和 1 个倒档。

– 差速器壳体和主减速器

差速器可以是原件或新的。

只能注册一个主减速比。

主减速器的壳体支架必须注册。

7.1.3 车轴与悬架系统

– 安装悬架用的副车架和横梁

原装构件只能通过增加材

material or aluminium alloy; the joints are free.

- Gearbox

The gearbox must be with sequential control.

The use of titanium alloy, ceramics, magnesium alloy, composites or reinforced fibreglass is forbidden, unless the material of the part in question correspond exactly to the original series production material.

The gearbox mountings must be homologated.

Adapters may be fitted between the engine block and the gearbox.

It must have a maximum of 6 forward gears and 1 reverse gear, and the housing must be made from aluminium alloy.

The minimum weight of the complete gearbox (without supports, oil, clutch, external control and without half-shafts) must be :

- 35 kg for a gearbox with an integrated differential,

- 30 kg for a gearbox without differential.

The price of the complete gearbox must be less than 20000 Euros.

2 sets of 6 forward ratios and one reverse ratio may be homologated.

- Differential housing and final drive

The differential may be original or new

Only one final drive ratio may be homologated.

The final drive housing mountings must be homologated.

7.1.3 Axles and suspensions

- Subframes and crossmembers for fixing the suspensions

料进行加强，条件是易于识别。

可进行改装以用于安装或固定作变速箱，主减速器壳，或整合横向稳定杆的轴承。

原始构件可以被修改用于装配限位，即可在支架平面到车身主体的部分加工环形槽。

这些改变意味着一旦新的装配部件已被移除，则原始安装部件（阻尼块等）应该可以被重新装配，而原有的支架或横梁仍然可以被安装和恢复其在车身主体他们的原始位置上。

– 悬架系统叉臂和定摇臂

a. 原装零件

原装零件只能通过增加材料进行加强，条件是易于识别，且不能将两个独立的零件通过加强整合成一个。

零件的连接位置可以进行如下改装：

– 为了装配锁止而加工环形槽；

– 安装偏心衬套的自旋锁紧装置（平头螺钉，销，螺栓等）；

– 为了安装球铰而将锥形孔或螺纹孔再加工成圆柱孔时，但是圆柱孔的直径应为原有锥形孔或螺纹孔的最大直径；

– 刨平接头固定件的接触面。

The original parts may be reinforced only by adding material, on condition that they can be easily identified.

They may be modified for the fitment of the gearbox, for the final drive housing and for the integration of the anti-roll bar bearings.

They may be modified at the level of the mountings to the bodyshell for the making of circular grooves for the fitting of stops.

This means that once the new mounting parts have been removed, the original mounting parts (silent blocks) may be refitted and that the cradles and/or cross members may then be remounted on the bodyshell in their original locations and resume their original position.

- Suspension wishbones and arms

a. Original part

The part may be reinforced only by adding material, on condition that they can be easily identified and that the reinforcements do not allow two separate parts to be joined together to form one.

The part may be modified at the location of joints for :

- the making of circular grooves for the fitting of stops,
- the fitting of spin locking devices (grub screws, pins, bolts or similar) for the eccentric bushes,
- the machining of the tapered or threaded bores for the fixing of the ball joints to transform them into cylindrical bores, the diameter of which corresponds to the largest diameter of the original tapered bore,

这意味着，拆除新的连接件后，原装悬架连接件仍可以安装上并且能够工作。

对于任一原始的悬架系统压接式接头，在移除新的连接件后，而将原始连接件安装在其壳体上一定是可行的。

但是，不需要在事先进行恢复原装件工作的操作。

如果原始连接件的壳体并非圆柱形的，那么可以将其加工为圆柱形。

悬架系统安装在下三角臂靠近车轮一侧的球窝接头可以自由替换，只要其在臂上的固定点位置不被修改。

b. 新的零件

可以用新零件替换原装零件，但其制造加工工艺只能是：成品钢板，钢管，或用整块金属材料机加工。

每一个新零件的最小重量不得低于原装零件重量的115%。

c. 几何

任何情况下，两接头中心间的尺寸一定要早注册表中规定并表明公差（作为检查的判定标准）。

– 轮毂座（羊角）及其支撑

a. 原车零件或者来自于产

- the planing of the contact area of the joints fixing elements.

This means that, after removing the new joint of the suspension part, an original suspension joint can be fitted and that the original operation of the suspension part can be restored.

In the case of an original crimped joint in a suspension part, it must be possible, after removing the new joint, to fit the original joint in its housing.

However, it is not necessary for the initial operation of the suspension part to be restored.

If the original housing of a joint is non-cylindrical, the machining of this housing so as to obtain a cylindrical shape is permitted.

The suspension ball-and-socket joints situated on the arms at the lower triangle on the wheel side may be freely replaced, provided that the fixation points on the arms are not modified.

b. New part

Orignal parts may be replaced with new parts exclusively made from the following manufacturing technologies : fabricated steel sheet, steel tubing, metallic material machined from mass.

The minimum weight of each part must not be less than the weight of the original part increased by 15%.

c. Geometry

In all cases, the dimensions between the centres of the joints must be specified on the homologation form with a tolerance (to be defined at the inspection).

- Hub-carrier or front hub-carrier support

量不少于 2500 辆的量产车零件

零件可以通过增加加强筋加固，但是不能产生中空结构且不能将两个独立的零件通过加强整合成一个。

零件的连接位置可以进行如下改装：

- 为了装配锁止而加工环形槽；
- 安装偏心衬套的自旋锁紧装置（平头螺钉，销，螺栓等）；
-
- 为了安装球铰而将锥形孔或螺纹孔再加工成圆柱孔时，但是圆柱孔的直径应为原有锥形孔或螺纹孔的最大直径；
- 刨平接头固定件的接触面。

这意味着，拆除新的连接件后，原装悬架连接件仍可以安装上并且能够工作。

对于任一原始的悬架系统压接式接头，在移除新的连接件后，而将原始连接件安装在其壳体上一定是可行的。

但是，不需要在事先进行恢复原装件工作的操作。

如果原始连接件的壳体并非圆柱形的，那么可以将其加工为圆柱形。

转向拉杆在羊角上的连接

a. Original part or part coming from a model of the manufacturer produced in a minimum of 2500 units.

The part may be strengthened with the addition of ribs, provided that the reinforcements do not create hollow sections and do not allow two separate parts to be joined together to form one.

The part may be modified at the location of joints for :

- the making of circular grooves for the fitting of stops,
- the fitting of spin locking devices (grub screws, pins, bolts or similar) for the eccentric bushes,
- the machining of the tapered or threaded bores for the fixing of the ball joints to transform them into cylindrical bores, the diameter of which corresponds to the largest diameter of the original tapered bore,
- the planing of the contact area of the joints fixing elements.

This means that, after removing the new joint of the suspension part, an original suspension joint can be fitted and that the original operation of the suspension part can be restored.

In the case of an original crimped joint in a suspension part, it must be possible, after removing the new joint, to fit the original joint in its housing.

However, it is not necessary for the initial operation of the suspension part to be restored.

If the original housing of a joint is non-cylindrical, the machining of this housing so as to obtain a cylindrical shape is permitted.

的位置不限，但是固定的轴线必须与原车保持一致。

b. 新的零件

原装零件可以用一块金属材料机加工而成的新零件替换，新零件的最小重量不得低于原装零件重量的 115%。

连接的支座可以作为一个单独零件安装在羊角上。

每一个连接的轴线的位置必须是唯一的

安装在羊角和羊角支撑和支撑之间的垫片只能需要在对轴先的几何位置进行调整的情况下才能调节。

- 横向稳定杆

为整合横向稳定杆轴承可以对车架主梁进行改装。

此项改装必须向注册规则委员会提交一份文件，证明整车的抗撞击性能没有改变。

前桥

- 连接点中心和上下叉臂或摆臂的连接点-车架一侧

连接点中心在车架参考坐标的位置可以相对原始位置移动最多 20mm。

实现这项改装可以通过改装车架或副车架的局部位置，或者改装用螺栓固定在车架或副车架上的连接点支撑实现，改装

The position of the joint of the steering rod on the hub carrier is free but the axis of the fixation must remain identical to the original.

b. New part

The original part may be replaced with a new part made from metallic material machined from mass, on condition that the minimum weight of the part is not less than the weight of the original part increased by 15%.

Joint supports may be separate parts mounted on the hub-carrier.

Each joint axis must have a single position.

The fitting of shims in between the hub-carrier and the supports is authorised solely to allow the adjustment of the axle geometry.

- Anti-roll bar bearings

The main rails of the bodyshell may be modified to integrate the anti-roll bar bearings.

These modifications must be submitted to the Homologation Regulations Commission with a document certifying that the impact resistance of the car is unchanged.

Front axle

- Centres of the joints and joints of the lower and upper wishbone or arms - On the bodyshell side

The position of the centres of the joints may be moved by a maximum of 20 mm in relation to the original position, in a frame of reference linked to the bodyshell.

This may be achieved by modifying locally the bodyshell or the subframe, or

位置要在距连接点中心半径100mm范围内。

可以在原固定位置打孔以安装悬架部件。

在与车身横轴垂直和平行的方向上，这些孔到原装固定位置的最大距离为10mm。

- 车架上的麦弗逊悬架支柱连接点和连接点中心

连接点中心在车架参考坐标的位置可以相对原始位置移动最多20mm。

如果原装的车身上没有合适或足够的安装孔，可以在安装减振器的塔顶上打三个最大10.5mm 直径的孔用以安装减振器上连接点的支座。

可以在原固定位置打孔以安装悬架部件。

在与车身横轴垂直和平行的方向上，这些孔到原装固定位置的最大距离为10mm。

可以重新制作减振器塔顶，用以安装到麦克弗逊支柱。

新的塔顶必须与原装塔顶一样高，顶端最大直径为170mm，与图n° 3一致。

- 连接点中心和上下叉臂或摆臂以及轮毂支座的连接点-车轮一侧

在轴距和前悬不变的前提

the joints supports bolted to the bodyshell or the subframe, within a sphere of 100 mm radius from the original joint centre.

Holes for the mounting of suspension parts may be made at the anchorage points.

In relation to the original articulation points, these holes must be situated at a maximum distance of 10 mm at right angles to or parallel to the transverse axis of the vehicle.

- Centres of the joint and joint of the McPherson strut on the bodyshell

The position of the centres of the joints may be moved by a maximum of 20 mm in relation to the original position, in a frame of reference linked to the bodyshell.

Three (3) holes of a maximum diameter of 10.5 mm may be bored in the upper bell housing of the shock absorber for the mounting of the upper joint support if, in the original bell housing, there are no, or not as many, fixation holes.

Holes for the mounting of suspension parts may be made at the anchorage points of the bodyshell.

In relation to the original articulation points, these holes must be situated at a maximum distance of 10 mm at right angles to or parallel to the transverse axis of the vehicle.

It is possible to recreate a shock absorber turret to allow the mounting of the strut.

The new turret must be of the same height as the original turret and the maximum diameter at the top is 170

下，连接点中心的位置不受限制。

对于原装部件，这种改装可以通过在原连接点中心 100mm 以内的叉臂或摆臂的末端，加装可拆除的系统实现。

后桥

– 连接点中心和叉臂或摆臂的连接点-车架一侧

连接点中心在车架参考坐标的位置可以相对原始位置移动最多 20mm。

实现这项改装可以通过改装车架或副车架的局部位置，或者改装用螺栓固定在车架或副车架上的连接点支撑实现，改装位置要在距连接点中心半径 100mm 范围内。

可以在原固定位置打孔以安装悬架部件。

在与车身横轴垂直和平行的方向上，这些孔到原装固定位置的最大距离为 10mm。

– 单连杆后悬架

允许对原装的悬架部件进行改装以调节车轮外倾角和前束。

增加的材料必须沿着原装部件形状并与其保持接触。

弹簧和减振器的组合以及安装基座，悬架旋转轴心到车轮

mm, in accordance with Drawing n°3.

- Centres of the joints and joints of the lower and upper wishbone or arms and/or of the hub-carrier support - On the wheel side

The position of the centres of the joints is free within the respect of the wheelbase and front overhang.

For the original part, this may be achieved by modifying the extremity of the wishbone or arm through the addition of a removable system, within 100 mm from the original centre of the joint.

Rear axle

- Centres of the joints and joints of the wishbones or arms - On the bodyshell side

The position of the centres of the joints may be moved by a maximum of 20 mm in relation to the original position, in a frame of reference linked to the bodyshell.

This may be achieved by modifying locally the bodyshell or the subframe, or the joints supports bolted to the bodyshell or the subframe, within a sphere of 100 mm radius from the original joint centre.

Holes for the mounting of suspension parts may be made at the anchorage points.

In relation to the original articulation points, these holes must be situated at a maximum distance of 10 mm at right angles to or parallel to the transverse axis of the vehicle.

- Single-Link rear suspension:

The original suspension parts may be

立柱轴心线的原始距离都不可以改变。

– 新的后桥

如果后桥在底座上只有两个或三个安装点，允许制作新的后桥，新的后桥必须符合下述条件：

– 安装点的数量以及运动学原理必须与原装一样，新的后桥必须与原装件可互换；

– 新的安装点必须位于原始安装点 10mm 以内。

– 不允许改装车架；

– 除了轮毂总成（轮毂、轮轴轴承和 轴）必须符合章节 263.9.3.5 保持原装，轮轴的其他部件不受限制；

– 新的旋转点必须位于原始旋转轴+/-20mm 以内；在这些安装点不能使用滚珠轴承。

7.1.4 制动系统

– 踏板箱

– 制动

要注册两套完整的前后制动系统（卡钳、刹车盘，盘罩）。

最大制动活塞数量前方为 4，后方为 2。

制动卡钳的整体必须使用去最大屈服强度(不小于)75Gpa 的铝质材料，内部可以部分使用钢或使用钛合金制造。

modified in order to allow the adjustment of the camber and the toe.

The addition of material must be done by using a material which follows the shape of the original part and is in contact with it.

The combination and the standard fitting of the spring and of the shock absorber, as well as the original distance between the rotational axis of the running gear and the central axis of the wheel upright, must not be modified.

- New rear axle

If the rear axle has only two or three anchorage points to the chassis, a new rear axle may be homologated on the following conditions :

- The number of anchorage points as well as the kinematic principle must remain original, the new axle must be interchangeable with the original,
- The anchorage points must be situated at a maximum of 10 mm from the original anchorage points,
- The chassis must not be modified,
- With the exception of the wheel hub assembly (hub, wheel bearing and stub axle), which must remain original in compliance with article 263.9.3.5, the components of the axle are free,
- The new rotational points must remain on the axis of the original rotation, with a tolerance of + or – 20 mm; the use of roller bearings at these anchorage points is not authorised.

7.1.4 Braking system

- Pedal box

- Brakes

Two complete front and rear brake

制动盘的最大直径是343mm，必须使用铁质材料制造。

每年只有一次机会，允许通过勘误的方式对制动盘上的刻槽或者打孔进行改动。这项勘误不会被计入注册的最初 5 项勘误或者 5 项“特许变更（Joker）”（参见 7.2 条）。

从一项注册勘误开始起的 12 个月内，既可以使用注册勘误后的零件，也可以使用勘误前的注册件，条件是：

从赛员开始使用注册勘误后零件开始，他将禁止再使用此前注册的零件。

在这这 12 个月到期后，只剩下注册勘误的零件有效。

7.1.5 转向系统

- 转向管柱

可以注册一个新的转向管柱。

必须注册一个量产的能量吸收装置。

- 转向机构（转向机和壳体）

必须是原装的或者来自厂商量产达到 2500 辆车型上，且必与原装件可以互换的。

垂直位置可以改动。

可以局部改装车架以使转向管柱通过。

systems (callipers, brake discs, disc bells) may be homologated.

The maximum number of pistons is 4 for the front calipers and 2 for the rear calipers.

All elements of the brake calipers must be made from aluminium with a maximum yield strength of 75 Gpa, but the internal elements of the brake calipers may be made from steel or titanium alloy.

The maximum diameter for the brake disks is 343 mm and they must be made from ferrous metallic metal.

Only once a year, the grooves and/or drillings of the friction surface of the homologated discs may be modified through an erratum. This erratum will be registered neither among the first 5 errata nor among the 5 "jokers" (see Article 7.2).

Over a period of 12 months starting from the homologation of an erratum, it is possible to use the part homologated in the erratum or the part previously homologated under the following conditions :

From the time a competitor uses the part homologated in the erratum, he must no longer use the part previously homologated.

At the end of this 12-month period, only the part mentioned in the erratum is valid.

7.1.5 Steering system

- Steering column

A new steering column may be homologated.

A series-produced energy absorbing

7.1.6 车体和空气动力学装置

– 仪表台的改装

只能是为提升车内前方视野的目的，可以将仪表板圆隆起部分降低最大高度 50mm，降低的最大宽度是 400mm。

由此造成的开口必须封闭。

– 风挡雨刷和雨刷臂

其数量应和原厂保持一致，并且无其他额外功能。

– 发动机舱盖的栅格开口

机盖开口后应保持原来形状，开口最大面积为 1050 cm2，

再次机盖开口允许添加一个边框塑料件作为装饰。

这个装饰件发动机舱盖上的最大高度是 15mm。

最大开口面积 1050 cm2 不计算这个添加的边框。

– 翼子板和保险杠的宽度

宽度在此车系（25000 产量，注册表第 203 条）最大宽度的基础上最多增大 3%。且任何情况下不能超过 1885mm。

如果照此增大后的宽度小于 1809mm，那么则允许其增大幅度超过 3%，以达到 1809mm。

前翼子板可以通过延展自身或者使用新部件来增加宽度。

前翼子板必须尽可能的保

device must be homologated.

- Steering mechanism (housing and rack)

It must be original or come from a model of the manufacturer produced in a minimum of 2500 units and must be interchangeable with the original one.

Its vertical position may be modified.

Local modifications of the bodyshell are authorised for the passage of the steering column.

7.1.6 Bodywork and aerodynamic devices

- Modification to the dashboard

For the sole purpose of improving forward visibility, the height of the dashboard hump(s) may be reduced by a maximum of 50 mm over a maximum width of 400 mm.

The resulting opening must be sealed.

- Windscreen wiper blades and arms

Number identical to the original and no additional function.

- Grille-covered opening in the engine bonnet

Of the same shape as the original part cut out of the bodywork and with a maximum surface of 1050 cm2.

In the opening made in the bonnet, it is permitted to add a plastic part serving as trim.

The maximum height of this trim in relation to the bonnet is 15 mm.

The maximum opening of 1050 cm2 is calculated without taking this added part into account.

- Widening of the wings/bumpers

Increase in the width by a maximum of 3% in relation to the maximum width of

持原有的外形。

使用的材质可以是塑料或是复合材料。

前后保险杠的外侧部分必须要紧贴前后翼子板。不允许制作新的内侧车轮拱罩。外壳体，侧边部分，副车架以及安装点必须遵循附录 J，Group A 的规则（J-255）要求。

这些翼子板和车轮拱罩不能提升额外的空气动力学效应。

套件注册的翼子板必须是连续的，不能有气流进出通道。

只有前保险杠的外侧部分可以改装，其必须紧贴翼子板。且不能有任何空气动力学效应的提升。

对于后翼子板，允许局部的切除以安装车轮（必须提交切除部分的图纸）。

可以在原翼子板外粘贴一个复合材料制成的新翼子板。

注册时必须提供尾翼的改装图纸。

一个新的后保险杠可以注册外侧部的改装部件和最多两个排气管出口。

- 车门

安装在门内的吸能部件的种类和形式必须注册。

- 后门的改装

the family of the car (25000 units - Art. 203 of the homologation form). This width must in all cases be limited to 1885 mm.

If the width thus obtained is less than 1809 mm, the increase in the width may be more than 3% in order to reach a width of 1809 mm.

For the front wing, this increase may be obtained by means of an extension or a new part.

The shape of this wing must respect the shape of the series wing as far as possible.

The series material may be replaced with plastic or composite material.

The lateral part of the front and rear bumpers must follow the volume of the wing. The making of new inner wheel arches is not allowed. The housings, side members, subframes and mounting points must remain in conformity with Appendix J, Group A.

These wings and wheel arches must not give rise to any additional aerodynamic effect.

The wings homologated via the kit must be continuous, with no air intakes or outlets.

Only the lateral parts of the front bumpers, which must follow the volume of the wing, may be modified via the kit. These lateral parts must not give rise to any aerodynamic effect.

For the rear wings, it is possible to cut the original wing locally to allow for the passage of the wheel (a plan of the cut-out must be supplied).

A new outside wing made from

允许为安装车轮而局部改装后门，车门装饰条可以拆除。

这些改装不能越过车轮中心线之前的 700mm。

– 空气动力学装置/前保险杠

所使用的材料和外形可以自由设计，限制条件是在前轮轴线前 300mm 处的垂向横断面之前，并且在距离地面 230mm 的水平面以下。参见附图 n° 1。

在这个区域以外，可以雾灯和温度探测器开孔，只要遵循保险杠原装的外形。

在水平方向选取距离地面 80 到 230mm 之间的水平面内的部分。在这范围以上的保险杠形状禁止修改（除非为了符合注册规则附录一中给出的翼子板定义，进行的最大面积为 800 cm2 开口或扩口或者增加外部零件的改装）。

原装的空气进出口可以部分或者完全封闭。条件是封闭面应在原开口表面基础上箱内缩进至少 2mm。

在此之下，形状不限，但保险杠零件的垂直投影不能有突出的部分。

注册车系的总长和前悬的限制有效（见 7.1 条，长度-轴

composite material may be stuck onto the original wing.

A plan of the modification of the rear wing must be supplied at the time of homologation.

A new rear bumper may be homologated for the modification of the lateral parts and for the creation of a maximum of two cut-outs for the exhaust exit.

- Door

The nature and form of the energy-absorbing part fitted in the doors must be homologated.

- Modifications to rear doors

Localised modifications of the rear doors are authorised to allow the passage of the wheel. The door mouldings may be removed.

These modifications must not extend more than 700 mm ahead of the rear wheel centreline.

- Front aerodynamic device / front bumper

The material and the shape are of free design, limited by the vertical transverse plane passing through a point situated 300 mm ahead of the axis of the front wheels and the horizontal plane below 230 mm from the ground (Kit Car). See drawing n°1.

Outside this area, the sealing of apertures for fog lights and temperature probes is authorised while respecting the shapes of the original bumper.

On flat level ground, take a height measurement of between 80 and 230 mm. Above this limit, the shape of the bumper must not be modified (except

距）。

最大宽度按注册表 203 条（25000 量产车系），增大 3%。

宽度在任何情况下不可超过 1885mm。

前方的限制为原型车保险杠的垂直投影（见 7.1 条，长度-轴距）。

底部必须由最多两个平面构成（一个水平一个内倾），且任何时候内倾角度与水平面最大不超过 8°。

底部与保险杠最前点的距离不得超过 250mm。

保险杠的材料禁止更改（塑料还是塑料，包括复合材料）。

不限部分的底部最后点必须位于前轮轴线之前 390mm 和 325mm 的之间。

不限部分的圆角最大半径为 40mm。

从不限部分到在前轮轴线车位置的身最宽点水平方向上距离不得超过 50mm。

前保险杠的地步可以是可拆卸的。从上部垂直观察，任何可拆卸的部分都不得突出于上面部分。

外侧表面必须是连续的且不能有任何气流进出通道。

- 基本型的改进款

for additional/extended opening(s) of maximum 800 cm2 area that may be cut and the lateral parts that may be modified according to the definition of the wing given in Appendix 1 to these homologation regulations).

Original air intakes and outlets may be partly or completely sealed, on condition that the obstructive surface is set back at least 2 mm behind the exterior surface of the opening.

Below, the shape is free, but this part of the bumper must not protrude when seen in vertical projection.

Limited by the homologated overall length and front overhang of the family (see Article 7.1 – Length - wheelbase).

Maximum width according to art. 203 of the homologation form (family - 25000 units), increased by 3%.

This width must in all cases be limited to 1885 mm.

Limited to the front by the vertical projection of the bumper of the original model (see Article 7.1 – Length - wheelbase).

The lower portion of this part must be formed from a maximum of two planes (one horizontal and one inclined) and must form a maximum angle of 8° to the horizontal at all times.

This lower portion is limited to a maximum of 250 mm from the furthest forward point of the bumper.

The material of the bumper must remain unchanged (plastic remaining plastic, including composite materials).

The lower rear point of the free part must be situated between 390 mm and

如果基本型注册了一个改进款（根据 A 组注册规则 7.1 条），厂商也可以更新已注册 S2000 版本的车身部分。

更新注册的要求如下：

- 最小生产 3 套用于更新注册的 S2000 车身套件。

- 在新车系在 A/N 组注册的新车型的产品证书。

- 后部空气动力学装置(后尾翼)

原装的空气动力学装置必须拆除。

必须安装一套单一的尾翼装置（翼板，支架和侧板）。

材料不限。

此翼板必须按照附图 n° 2 和附录 3 定义的规格制造。

对于两厢车，如果此尾翼安装在尾门上，对 75㎜ 规格的要求不再强制执行。

此尾翼必须是质地必须是坚硬密实的，不能出现空气漏过可能（凹槽，孔洞开口等）。

翼板必须是单体制造(一块单独的翼板没有副翼且与附录 3 完全一致），并且必须整体是直的。

这个尾翼装置必须完全包括在赛车的前视投影范围内(不包括外后视镜），最大宽度是

325 mm ahead of the front wheel axis.

The angles of the free part must have a maximum radius of 40 mm.

The maximum distance between the free part and the maximum width of the car at the level of the front wheel axis must be no greater than 50 mm.

The lower part of the front bumper may be detachable. No element of this detachable part may protrude beyond the upper part, when seen in vertical projection.

The surface of the lateral part must always be uniform and must not have any air inlet or outlet.

- Evolution of the type for the basic model

If an evolution of the type is homologated for the basic model (in accordance with Article 7.1 of the Homologation Regulations for Group A cars), the manufacturer may also update the bodywork of the Super 2000 version already homologated.

The requirements for this are as follows :

- minimum production of 3 sets of bodywork parts necessary for updating the bodywork of the Super 2000 version.

- the production certificate of the new model homologated in Group A/N and of its new family.

- Rear aerodynamic device (rear wing)

The car's original device must be removed.

One single device (wing profile, supports and side plates) must be present.

1220mm。设置为 149

整套尾翼装置总成，包括其支架必须能够容纳进一个宽 150mm，高 200mm 的箱体内。

翼板的最大弦长设置为 149 mm +/- 1 mm。

从 0° 入射角检查，距离“a”最小为 100mm

Be 183-176 型剖面单体翼板（参见附录 3）的最大宽度不能超过 1200mm，且此剖面可以调节。

测量界面是允许的制造公差为+/- 0.5 mm。

此公差在两次连续的测量中必须是随机的。

尾翼后缘的厚度为 2mm。

在玻璃上安装附件是禁止的，只有尾翼支架允许。

侧安装板必须是可拆卸的，必须至少有 10mm 厚，而且必须不能产生任下压何空气动力。

尾翼必须在赛车水平状态检查。

尾翼支架必须符合附图 n° 2 定义并且两个侧板之间距离不能小于 100mm（沿尾翼宽度方向横向测量）。

- 车架/车壳

为拆除无用附件的安装支架并修整，可以对车架的局部改

Material is free.

This device must respect the dimensions defined by Drawing n° 2 and Appendix 3.

For two-volume cars, if the device is mounted on the top of the tailgate, the compliance with the 75 mm dimension is not mandatory.

This device must be rigid and offer no possibility for the penetration of air (groove, hole, opening, etc.).

The wing profile must be made in one single piece (a single profile and no adjustment flap in conformity with Appendix 3), and must be straight in all its dimensions.

The device must be totally contained within the frontal projection of the car without its wing mirrors and must have a maximum overall width of 1220 mm.

The complete assembled device must be contained, together with its supports, within a box having a width of 150 mm and a height of 200 mm.

The maximum chord of this wing profile is set at 149 mm +/- 1 mm.

The distance “a” of at least 100 mm is checked at 0° of incidence.

The maximum width of the single Be 183-176 type carrier profile (see Appendix 3)must not exceed 1200 mm and this profile may be adjustable.

A manufacturing tolerance of +/- 0.5 mm is applied for measuring the profile.

This tolerance must be random between two consecutive measurements.

The trailing edge may have a thickness of 2 mm.

Attachment onto the glass is prohibited,

装。

- 防滚架

防滚架必须按照防滚架注册规则在国际汽联注册。

一个 S2000 VK 注册只能注册一个防滚架，且必须在 S2000 延伸注册的完整资料中标明。

- 文档

每年，厂商必须向国际汽联提交下列文档，包括：

- 一个套件的所有零件的清单
- 套件的装配说明
- 主要零件的价目表

即使没有明确被禁止，任何与规则精神不符和可能导致赛车成本增加的改装都有可能在未被通知的情况下禁止。

7.2 勘误变更（ER）和特许变更（Joker）

勘误变更（ER）：

勘误是对厂商此前提交的注册表中错误信息的指明和更正。

勘误会删除和更正这段信息。

勘误可以更正已有的错误，使之符合报表的要求，但不取代原已申报的部分。如果勘误内容

only support is authorised.

The side plates must be removable, must have a minimum thickness of 10 mm and must not generate any aerodynamic downforce.

The wing must be checked with the car horizontal.

The wing supports must be defined as in Drawing n°2 and must be no less than 100 mm from the side plates (measured transversally over the wing profile width).

- Chassis/shell

Localised modifications of the chassis are authorised for removing unused accessory supports and trim.

- Safety cage

The safety cage must be homologated by the FIA in accordance with the homologation regulations for safety cages.

Only one safety cage may be used with the Super 2000 Kit Variant and it must be mentioned in the complementary information of the S2000 extension.

- Dossier

Each year, the manufacturer must send the FIA a dossier which must contain:

- A list of all the parts of the kit
- The instructions for assembling the kit
- A price list for the main parts

Even if not explicitly prohibited, any modification that is not in keeping with the spirit of the regulations and that may increase the price of the car shall be banned without notice.

7.2 Erratum (ER) and Jokers

Erratum :

An erratum is the discovery and

已经作为一个条款被接受，则再也不可修正此条款。勘误不需要最小产量要求。

关于更正，必须清晰注明错误的数据和修改的条款（或者配图）编号。

勘误表中还必须同时注明错误信息的详细情况（在基本注册表页码和延伸注册编号等）。

特许变更（Joker）：

在一辆赛注册的前 12 个月内，可以自由更改 5 项套件变更（一套传动速比视为其中一项）。

一辆赛车的注册有效期内只能有5个涉及S2000延伸注册的基本内容的特许变更（Joker）。

“Joker”是厂商对此前提交的错误信息的官方指明和更正。

“Joker”会在最迟 12 个月内删除和更正此信息.

“Joker”可以更正厂商的错误或一个零件的可靠性。

一项“Joker”至少需要制造 3 个零件。

关于更正，必须清晰注明错误的数据和修改的条款（或者配

correction of an incorrect piece of information previously supplied on a form by the manufacturer.

An erratum thus deletes and replaces this piece of information. Errata enable the correction of errors made in compiling the form, and not the replacement of existing parts. If an erratum has already been accepted for an item, it can no longer be corrected in this fashion. No production minimum is required for an erratum.

Concerning the correction, the incorrect data and the number of the article (or photo) modified must be clearly stated.

The details of the erroneous information (basic form page, number of the extension, etc.) must also be mentioned on this erratum form.

Joker :

During the first 12 months of the car's homologation, it is possible to change freely 5 articles of the Kit Variant (1 set of ratios is considered as 1 article).

Only 5 additional "jokers" concerning elements of the Super 2000 extension may be homologated during the lifespan of the car.

A "joker" is the official discovery and correction of a piece of information previously supplied by the manufacturer.

A "joker" deletes and replaces this piece of information after a maximum of 12 months.

A "joker" allows the correction of errors in the manufacture or reliability of a part.

A production minimum of 3 parts is required for a "joker".

图）编号。

“Joker”表中还必须同时注明信息的详细情况(在基本注册表页码和延伸注册编号等）。

计入“Joker”的发动机基本注册（参见发动机附录）：

注册为“Joker”的在发动机基本型进行的改动，在改装仅是由于模具更改导致而不需改变对机加工区域，且新的零部件可以完全与原先不见互换的情况下，将不被计入 VK-S2000 的零部件注册的“Joker”

计为一次“Joker”的一些发动机零件改动（注册表第 3 条）：

参见附表《特许变更 Joker 规则表》（点击打开）

禁止更改正时传动类型(保持原来皮带、传动链链或齿轮的传动形式）

Concerning the correction, the modified data and the number of the article (or photo) modified must be clearly stated.

The details of the information (basic form page, number of the extension, etc.) must also be mentioned on this “joker” form.

Counting linked to the "jokers" of the basic engine homologation (see Appendix Engine) :

Modifications on the basic engine, homologated as "joker", will not be counted as "joker" for the part homologated in VK-S2000 on condition that the modifications are only the consequence of those of the moulds and cores, with no intended change on the machined areas, and that the new part is completely interchangeable with the existing part.

Counting of one single "joker" for some engine parts (chapter 3 of the homologation form):

See table below (click to open).

The change of timing type is not permitted (belt remains belt, chain remains chain, gears remain gears).

JOKER RULER/特许变更规则

1 = 1 extra joker is counted / 计算 1 次 Joker. 0 = No extra joker / 不计为 Joker.

This table solely refers to modifications done to part B which are a direct consequence of the modifications initially done on part A. /此表仅仅是指出哪些 B 栏的零部件改动是此前对 A 栏零部件的改动导致的直接后果

"FIA answer to any request for clarification from one manufacturer will be communicated to all manufacturers (without mentioning the name of the applicant and details of the application).

国际汽联对任何一个厂商提出的澄清要求澄清的回复将会通报给所有厂商（申请者的名字和申请内容细节将不会透露）

Article/Photo 条款/照片	ENGINE 发动机 (A / B)	C1-3) Cylinderhead cover 缸盖罩	311 Cylinder block 缸体	312 Cylinder block height 缸体高度	313 Sleeves 缸套	C2 Engine Support 发动机支架	317 Piston 活塞	318 Connecting rod 连杆	319 Crankshaft 曲轴	320 Flywheel 飞轮	321 Cylinder head 缸盖	324 Injection + Actuators & sensors 喷射+执行器 & 传感器
C1-3)	*Cylinderhead cover / 缸盖罩*	0	1	1	1	1	1	1	1	1	0	1
311	*Cylinder block / 缸体*	1	0	0	0	0	1	1	1	1	0	1
312	*Cylinder block height / 缸体高度*	1	0	0	1	0	1	0	1	1	1	1
313	*Sleeves / 缸套*	1	0	1	0	1	0	1	1	1	0	1
C2	*Engine Support / 发动机支架*	1	0	0	1	0	1	1	1	1	1	1
317	*Piston/ 活塞*	1	1	1	0	1	0	0	1	1	1	1
318	*Connecting rod / 连杆*	1	1	1	1	1	0	0	0	1	1	1
319	*Crankshaft / 曲轴*	1	0	1	1	1	1	0	0	0	1	1
320	*Flywheel / 飞轮*	1	1	1	1	1	1	1	0	0	1	1
321	*Cylinder head / 缸盖*	0	0	1	1	1	0	1	1	1	0	0
324	*Injection + Actuators and sensors / 喷射系统 + 执行器和传感器*	0	0	1	1	1	1	1	1	1	0	0
325	*Camshafts / 凸轮轴*	0	1	1	1	1	0	1	1	1	1	1
326	*Timing / 正时*	0	0	1	1	1	0	1	1	1	0	1
327	*Intake / 进气*	1	1	1	1	1	0	1	1	1	0	1
328	*Exhaust / 排气*	1	1	1	1	1	0	1	1	1	0	1
331	*Cooling system / 冷却系统*	1	0	1	1	1	1	1	1	1	1	0
333	*Lubrication system / 润滑系统*	0	0	1	1	1	1	1	0	1	0	0
334	*Supercharging / 增压*	1	1	1	1	1	1	1	1	1	1	1
402	*Fuel Pump / 燃油泵*	0	1	1	1	1	1	1	1	1	0	0
504	*STARTER / 起动机*	1	0	1	1	1	1	1	1	0	1	1
602	*CLUTCH / 离合器*	1	1	1	1	1	1	1	1	0	1	1
603	*GEAR-BOX / 变速箱*	1	0	1	1	1	1	1	1	1	1	1

Article/Photo 条款/照片	ENGINE 发动机 (A / B)	325 Camshafts 凸轮轴	326 Timing 正时	327 Intake 进气	328 Exhaust 排气	331 Cooling system 冷却系统	333 Lubrication system 润滑系统	334 Supercharging 增压	402 Fuel Pump 燃油泵	504 STARTER 起动机	602 CLUTCH 离合器	603 GEAR-BOX 变速箱
C1-3)	*Cylinderhead cover / 缸盖罩*	1	1	1	1	1	1	1	1	1	1	1
311	*Cylinder block / 缸体*	1	0	1	1	0	0	1	1	0	1	0
312	*Cylinder block height / 缸体高度*	1	0	1	1	1	1	1	1	0	1	0
313	*Sleeves / 缸套*	1	1	1	1	1	1	1	1	1	1	1
C2	*Engine Support / 发动机支架*	1	1	1	1	1	1	1	1	1	1	1
317	*Piston/ 活塞*	1	1	1	1	1	1	1	1	1	1	1
318	*Connecting rod / 连杆*	1	1	1	1	1	1	1	1	1	1	1
319	*Crankshaft / 曲轴*	1	1	1	1	1	1	1	1	1	1	1
320	*Flywheel / 飞轮*	1	1	1	1	1	1	1	1	0	0	1
321	*Cylinder head / 缸盖*	0	0	0	0	1	1	1	1	1	1	1
324	*Injection + Actuators and sensors / 喷射系统 + 执行器和传感器*	0	0	0	0	0	0	0	1	1	1	1
325	*Camshafts / 凸轮轴*	0	0	0	0	1	1	1	1	1	1	1
326	*Timing / 正时*	0	0	0	0	1	1	1	1	1	1	1
327	*Intake / 进气*	1	1	0	0	1	1	0	1	1	1	1
328	*Exhaust / 排气*	1	1	0	0	1	1	0	1	1	1	1
331	*Cooling system / 冷却系统*	1	1	1	1	0	1	1	1	1	1	1
333	*Lubrication system / 润滑系统*	1	1	1	1	1	0	1	1	0	1	1
334	*Supercharging / 增压*	1	1	0	0	1	1	0	1	1	1	1
402	*Fuel Pump / 燃油泵*	0	0	1	1	1	1	1	0	1	1	1
504	*STARTER / 起动机*	1	1	1	1	1	0	1	1	0	1	0
602	*CLUTCH / 离合器*	1	1	1	1	1	1	1	1	1	0	0
603	*GEAR-BOX / 变速箱*	1	1	1	1	1	0	1	1	0	0	0

计为一次“Joker”的一些与发动机支架或传动系支架相关零部件改动：

* 发送机或传动系支架

如果一个新的发动机或传动系支架使用一个 Joker，则为此注册对车身或者副车架进行必要改动将不会再计入 Joker。

计为一次“Joker”的一些传动系零部件改动（注册表第 6 条）：

* 对传动系统的所有壳体的改动只计为一个 Joker。由此而对换档机构进行的必要改动将不再计入 Joker。

如果一个新的变速箱壳使用一个 Joker，则由在此安装的起动机的位置的变化不再计入 Joker。

* 如果变速箱操纵机构的改动使用一个 Joker，则由此而对变速箱进行的必要改动不再计入 Joker

计为一次“Joker”的一些悬架零部件改动（注册表第 7 条）：

* 每张照片也就是每个部件使用一个 Joker。

计为一次“Joker”的一些转向部件改动（注册表第 804 条）：

Counting of one single "joker" for certain parts connected with the engine supports or transmission supports :

* engine or transmission supports

If a joker is used to homologate new engine or transmission supports, no joker will be counted to homologate the necessary changes to the bodyshell or to the subframes for installing the new tank.

Counting of one single "joker" for certain parts of the transmission (Chapter 6 of the Homologation Form):

* One single joker will be counted for the homologation of all the transmission housings. In this case, the necessary modifications to the gearbox control will not be counted.

If a joker is used to homologate a new gearbox casing, no joker will be counted to homologate the modifications to the position of the starter on this casing.

* If a joker is counted to modify the gearbox control, no joker will be counted for the necessary modifications to the gearbox.

Counting of one single "joker" for certain parts of the suspension (Chapter 7 of the Homologation Form):

* One joker per photo, i.e. per component, will be counted.

Counting of one single "joker" for certain parts of the steering (Article 804 of the Homologation Form):

* If a joker is used to homologate a new steering rack, no joker will be counted to homologate a new steering column.

Counting of one single "joker" for certain parts of the exterior (Article 902 of the

＊ 如果注册一个新的转向器使用了一个 Jolker，则因此注册的新的转向管柱不再计入 Joker。

计为一次“Joker”的一些外观件改动(注册表第 902 条)：

＊ 如果一个新的保险杠使用了一次 Joker，则因此而对包围件进行的改动注册不再计入 Joker，反之亦然。

＊ 如果对后包围的改动使用了一次 Joker(注册表 M6-3)，则后包围延伸件（注册表 M6-1 和 M6-2）的改动注册不再计入 Joker，反之亦然。

使用条件：

在新零部件注册之后旧件还有 12 个月的使用效期。

一辆赛车启用新的部件将会记录在技术执照内。从此刻开始该车就不在允许使用旧件。

追加的 Joker：

如果一个 VK-S2000 注册使用超过 36 个月，则可以注册 3 个追加的 Joker，使用条件等同其他 Joker。

发动机的追加 Joker：

在 S2000 延伸注册完成后的前 12 个月内，允许两个追加的 Joker。但是他们必须仅仅用于注册表中发动机条款列出的

Homologation Form):

* If a joker is used to homologate a new bumper, no joker will be counted to homologate a new fender on condition that the modifications on the fender are the direct consequence of those on the bumper, and vice versa.

* If a joker is used to homologate a new rear fender modification (cf. M6-3 on homologation form), no joker will be counted to homologate a new rear fender extension (cf. M6-1 and M6-2 on homologation form) and vice versa.

Conditions for use:

The old part will have a lifespan of 12 months after the homologation of the new part.

The use of the new part on a car will be noted on its technical passport. It will no longer be possible to use the old part as from the date specified.

Additional Jokers:

If the VK-S2000 extension has been homologated for more than 36 months, it is possible to homologate 3 additional jokers; the conditions for use are identical to those for the jokers.

Additional Jokers for the engine:

During the 12 months following the homologation of the S2000 extension, 2 additional Jokers are granted, but they must be used only to modify the articles of the Engine Chapter of the homologation form.

The conditions for their use are identical to those for the jokers.

- Sensors and actuators

In the event that the manufacturer is no longer in a position to supply the

项目的改动。

他们的使用条件等同其他 Joker。

- 传感器和执行器

在赛事中如果厂商无法提供 VK-S2000R 注册的传感器或执行器，则可以注册新的零件，只要他们的技术参数与原来完全相同。

7.3 供货变更（VF）

供货变更是指由不同的供应商提供相同零部件(注册定义的性能)，用户无法选择供应商的情况。

VK-S2000 注册的零部件都可以是供货变更的对象，发动机零件除外（参见注册表第 3 条）

发动机零件永远不能作为供货变更的对象（以下例外）：

• 对于发动机电控系统的传感器（注册表第 324g 条），最多两个供应商。

• 量产件

7.4 材料

除非另有规定，禁止使用钛合金和镁合金材料。原装车型零部件使用或者规则允许使用的情况除外。

除非另有规定，允许使用碳纤或者芳纶(芳族聚酰胺)纤维，条件是只能使用一层纤维且粘

sensors and/or actuators homologated in VK-S2000R, it is possible to homologate new sensors and/or actuators provided that the new sensors and/or actuators have exactly the same technical characteristics.

7.3 Supply variant

A supply variant corresponds to the delivery of the same part (characteristics identical to that homologated) by different suppliers, the customer having no opportunity to choose the supplier.

Except engine parts (cf. chapter 3 of the homologation form), parts homologated in Super 2000 Kit Variant may be the subject of a supply variant.

Engine parts that may nevertheless be the subject of a supply variant :

• Sensors of the engine electronic control system (cf. article 324g of the homologation form); maximum 2 suppliers.

• Series parts

7.4 Material

Unless stated otherwise, the use of titanium alloy and magnesium alloy is prohibited except for parts mounted on the (series) model from which the extension is derived or authorised by the regulations.

Unless stated otherwise, the use of carbon or aramid fibre is authorised on condition that only one layer of fabric is used and is affixed to the visible face of the part.

ARTICLE 8: SUBMISSION OF APPLICATIONS FOR HOMOLOGATION

贴在零件可视的一面。

ARTICLE 8：提交注册申请

套件注册的所有零件必须明显标记下列内容：

- 制造商名称
- 套件注册年份

8.1 技术执照

备注：制作技术执照还不具备条件，现有的技术执照将继续有效。

ARTICLE 9：注册的失效

VK 套件所对应的注册量产车型（见《A 组车辆注册规则第 10 条》产量达不到注册要求。

对应量产车型停产后 7 年之内套件注册有效。

ARTICLE 10：注册程序和日程

接受申请的截止日期		注册最早批准生效日期

1 日	11 月	2012		1 日	1 月	2013
1 日	2 月	2013		1 日	3 月	2013
1 日	6 月	2013		1 日	7 月	2013
1 日	10 月	2013		1 日	10 月	2013

对每份注册表每年有一次机会注册一个选择变更（VO）或者一个勘误变更（ER），只能涉及注册表中的一项内容。这个变更可以不通过例行的注册会议

All the parts of the kit must be marked legibly and show at least the following indications:

- The name of the manufacturer,
- The year of homologation of the kit.

8.1 Technical passport

Note: It will not be possible to create a technical passport but existing technical passports will remain valid.

ARTICLE 9: LAPSED HOMOLOGATIONS

The production connected with the Kit Variant (VK) (see article 10 of the "Homologation Regulations for Group A cars") will not affect the minimum production figure for the extension of the car's homologation.

The Kit Variant (VK) remains valid for 7 years after the end of production of the model from which it is derived.

ARTICLE 10: SCHEDULE OF HOMOLOGATION PROCEDURES

Application deadline for the receiving of the applications		Earliest date of commencement of validity of homologations granted

1	November	2012		1	January	2013
1	February	2013		1	March	2013
1	June	2013		1	July	2013
1	September	2013		1	October	2013

只要符合注册规则。

ARTICLE 11：临时注册

产量还没与达到注册要求的数量的情况下，生产厂商可以先为套件注册对应的车型或车系取得一个临时的 A 组注册，条件是：

- 该车型或车系的汽车已经正常上市销售；
- 要求达到的车系总产量（25000 辆）和车型总产量（2500 辆）能在本年度锦标赛最后一站赛事开始前实现。
- 其他注册要求完全满足。

如果在截止期限总产量要求仍没有实现，则厂商将被：

- 取消当年全部成绩；
- 处以高额罚款；
- 停赛一年。

For each homologation form and only once a year, it is possible to make an Option Variant or an erratum concerning only one chapter of the form without passing through the usual homologation sessions but respecting the Homologation Regulations.

ARTICLE 11: PROVISIONAL HOMOLOGATION

Manufacturers have the possibility of obtaining provisional Group A homologation of the family and the model from which the kit is derived, before the total production necessary for definitive homologation has been reached, on condition that:

- cars of the model and family under consideration are freely on sale to customers;
- the total production of the family under consideration (25000 units), and of the model under consideration (2500 units), is completed before the start of the last event in the Championship of the current year;
- all other homologation requirements are fulfilled.

If the full production is not completed before the deadline, the manufacturer:

- will be excluded from all the results of the current year;
- will be fined a considerable sum of money;
- will be suspended for one year.

附录 1 / APPENDIX 1
翼子板定义 / DEFINITION OF THE "WING"

参见《附录 J-253》 | See Article 251 of Appendix J.

附录 2 / APPENDIX 2
S2000 套件改装注册的检查程序
INSPECTION PROCEDURE FOR SUPER 2000 KIT-VARIANTS

提示：根据最新的会议精神，国际汽联决定对所有故意提供模糊不清或者不完整或者包含虚假信息的注册表的申请者进行处罚。

为了优化套件车的检查，有必要建立有关一个详细描述检查程序的文档。

所有的套件都应该系统的检查。

因注册需要，必须准备一台量产的裸车身，和一台改装后的车架。

1． 检查的时间和地点

检查地点应在注册车辆的生产厂商处，或者在由厂商委托的改装单位。平均的检查时间为通常为 4 小时。

2． 对注册表的检查

只有套件中的新零件必须在注册表中体现。

在注册规则委员会会议之后，有必要检查是否所有的改装

Reminder: Following the latest meetings, the FIA has decided to impose fines on all those who deliberately submit homologation forms that are illegible or incomplete or that contain false information.

In order to optimise the kit car inspections, it has proved necessary to produce a document detailing the inspection procedure.

All kits will be inspected systematically.

For the homologation, a bare series-produced chassis with the openings, and a modified chassis, must be presented.

1． DURATION AND SITE OF THE INSPECTION

The inspection will take place at the premises of the manufacturer who is homologating the vehicle, or, failing that, at a tuner's commissioned by that manufacturer. The average duration of an inspection is around 4 hours.

2 . CHECKING OF THE HOMOLOGATION FORM

Only the new parts of the kit car must be presented on the homologation form.

After the meeting of the Homologation

都已经由厂家出具了补充文件。

逐页浏览注册表，以确定是否有任何错误或遗漏。

- 照片 A

这张照片必须表现量产车型，只增加了授权的的套件。

对照提供的量产车型检查车门线形。

照片中的赛车不能有任何广告。

尺寸和重量

车辆的尺寸参数（即长度，前悬，轴距等）定义如下：

- Super 2000 注册表中将标注名义尺寸 +/- 1%

例：基础表上名义尺寸 = 4.2m +/- 1 %

- Super 2000 注册表标明数值 = 4.21 +/- 10 mm

这个数值包括 10mm 的公差必须始终在名义尺寸+/- 1%的范围区间内）。.

赛车的宽度和最大宽度。鉴于翼子板和尾翼 5 个零件都是新制的，测量的赋予值必须达到检查过程中测量值+ 0 -1%

- 307 条款

再次通过计算检查发动机排量，在注册表 3,1416 条。

Regulations Commission, it is necessary to check whether all the modifications have been made and complementary documents given by the manufacturer.

Go through the homologation form page by page in order to determine any errors or omissions.

- Photo A

This photo must represent the series model to which only the parts authorised by the kit have been added.

Check the door mouldings against the model presented.

The car shown on the photo must not have any advertising on it.

- Dimensions and weight

The dimensions of the car (i.e. length, overhang, wheelbase) will be defined as follows:

- The Super 2000 form will indicate the nominal value +/- 1%

e.g. nominal value on the basic form = 4.2 m +/- 1%

- The value indicated on the Super 2000 form = 4.21 +/- 10 mm (this value, with the 10 mm tolerance, must always be included in the nominal value +/- 1%).

The widths are maximum widths for the car. However, as the 5 wings are built, the measurement given must match the measurement taken during the inspection to about + 0 -1%.

- Art. 307

Check the cylinder capacities again by

发送机最大排量不得超过 1600 cm3。

缸径和最大缸径的差距必须不超过 0.6mm

- 327 条款

进气歧管从节气门（内置的）延伸到缸盖的连接部分。

发动机端口的图纸（第 8 页）必须标明尺寸。

3. 零部件检查

3.1 发动机零部件

每个零件的样品要称重。

对任何一种零件，个体重量差异不能超过最重件的 1%。

记入注册表的重量是测得最低重量减去 3%

3.1.1 缸体

如果进行了镗缸或者加套加工，则只选取测量一个加工缸体的名义尺寸。

3.1.2 连杆

统计发动机零件如下：

- 5 套 X4 只标记的连杆。

- 从不同套中选取 4 只连杆带着轴瓦称重。

- 检查标记（参见“标记”条款）

3.1.3 曲轴

相同操作。

calculation, P being taken as 3.1416.

The maximum cylinder capacity may on no account exceed 1600cm3.

The difference between the bore and the maximum bore must not exceed 0.6 mm.

- Art. 327

The intake manifold extends from the butterfly valve (inclusive) to the connection on the cylinder head.

The drawings of the engine ports (page 8) must show the dimensions.

3. CHECKING OF THE PARTS

3.1 Engine parts

Several examples of each part will be weighed.

For any given part, the lowest weight found must not be more than 1% less than the highest weight found.

The weight to be entered on the form is the lowest weight found less 3%.

3.1.1 Block

If a rebore or (re)sleeving has been carried out, it is necessary to present only one block rebored or (re)sleeved to the nominal dimension.

3.1.2 Connecting rods

Count the engine parts as follows:

- 5 x 4 marked connecting rods.

- Weigh at least 4 connecting rods from different sets with their bearings.

- Check the markings (Cf. chapter ‘Marking’).

3.1.3 Crankshaft

Same operation for the crankshaft.

3.1.4 飞轮

相同操作。

3.1.5 活塞

相同操作。

3.2 喷射系统

整套系统必须在注册表中体现。

所有传感器和执行器必须在照片 H 出现并计数。

3.3 进气

检查进气歧管，接口和标记。

3.4 车身

前空气动力学装置

后保险杠

检查后保险杠确保与注册的基本车型完全一致。

翼子板的改装

检查翼子板形状是否与原车形状一致。

防滚架：

对防滚架在车内的安装进行详细检查。

厂商必须提交一份详细的文件证明防滚架的安装过程没有导致对车身的任何改装。

只有车顶和驾驶舱与行李舱隔板可以在为安装防滚架临时拆下。

3.1.4 Flywheel

Same operation for the flywheel.

3.1.5 Piston

Same operation for the piston.

3.2 Injection

The complete system must appear on the homologation form.

All the sensors and actuators must appear on photo H and be counted.

3.3 Intake

Check the intake manifold, the ports and the markings.

3.4 Bodywork

Front aerodynamic device

Rear bumper

Check that the bumper is exactly identical to the homologated basic model.

Modification of the wings

Check that the shape of the wings respects the original shape of the car.

Safety cage:

A detailed inspection of the installation of the safety cage in the body will be carried out.

The manufacturer must provide a detailed dossier attesting that the installation of the safety cage did not entail any modifications to the body.

Only the dismantling of the roof and of the bulkhead separating the cockpit from the luggage compartment is allowed in order to install the safety cage.

3.5 Marking of the parts

3.5 零部件的标记

一个套件车型上使用的零部件绝对不能用于装配另一个车型。

标记零件的根本目的就是保护厂商免遭仿制。

因此有必要提醒他们注意正确实施标记。

- 复合材料制造的零部件：

注明汽车厂家和年份的标签必须嵌入在材料中，并且易于在赛事检查中见到和识别。

- 金属零部件

印记必须足够深入或者突出以阻止任何改动

可以使用电动雕刻工具进行标记，条件是要以明确的方式打上厂商的“logo”。

有必要提醒厂商，如果他们改装车身，则必须：

- 提交一份带有车架号的文件给国际汽联。

- 提交一份关于车身改装的全面的描述文件，逐点介绍所有被拆除的支撑结构。

- 提交每一个相对量产车身改动或者去掉的支撑结构的照片。

4. 检查结果

The parts used for one model of kit car may on no account be used for making up the 3 parts of another model.

The purpose of marking the parts is essentially to protect the manufacturer from copies.

It is therefore necessary to bring it to their attention that this marking must be carried out correctly.

- On parts made from composite materials:

A label stating the year and make of the vehicle must be embedded in the composite and be easily identifiable in the event of a check.

- On metal parts:

An imprint in the metal must be deep enough or protuberant enough to prevent any manipulation.

Marking by means of an electric engraving tool is acceptable on condition that it is accompanied by the manufacturer’s “logo”, written in a clear manner.

It is necessary to remind the manufacturer that if he modifies his bodyshell, he must:

- send a copy of the document with the chassis number to the FIA.

- present a comprehensive dossier concerning the modification of the shell, mentioning point by point all the supports that have been removed.

- present a photo of each support that has been modified or removed relative

检查结束后，将给出一份总结，列出任何必须在最终注册之前必须完成的修改。

to the series bodyshell.

4. FINAL READING

At the end of the inspection, a summary will be drawn up listing any modifications which must be made to the form prior to final homologation.

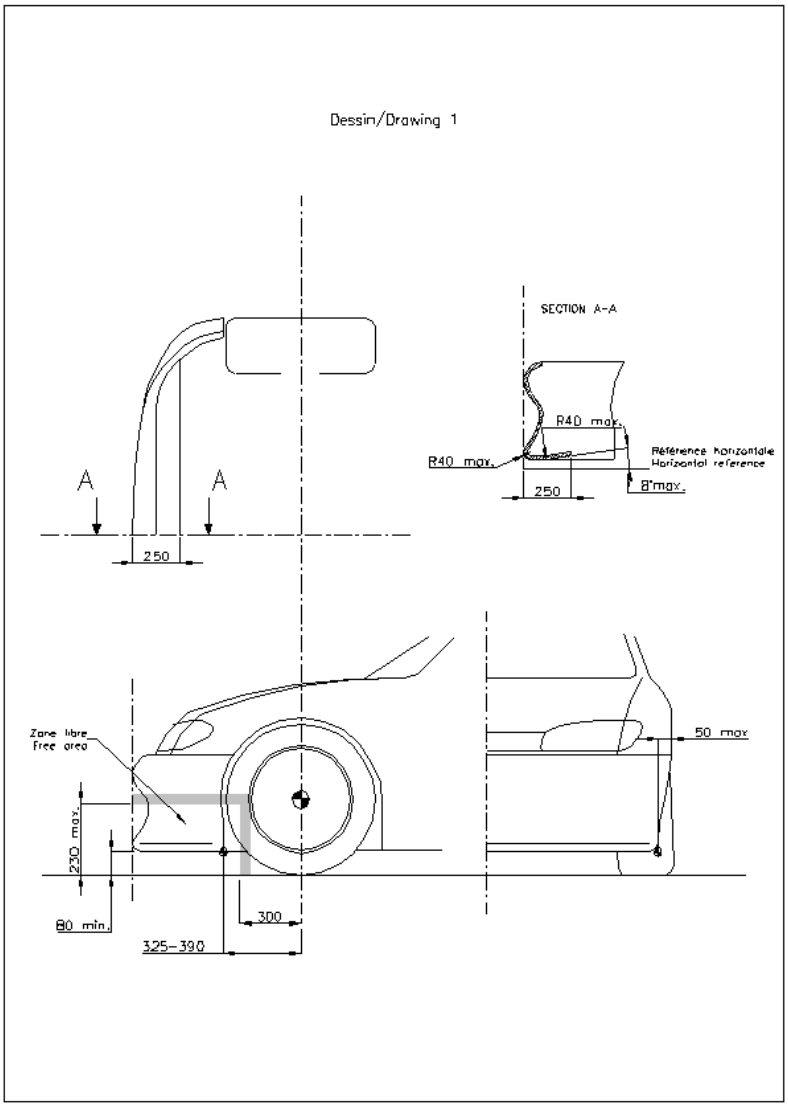
Dessin/Drawing 1
SECTION A-A
R40 max.
R40 max.
Référence horizontale
Horizontal reference
250
8°max.
A
A
250
Zone libre
Free area
230 max.
80 min.
300
325-390
50 max

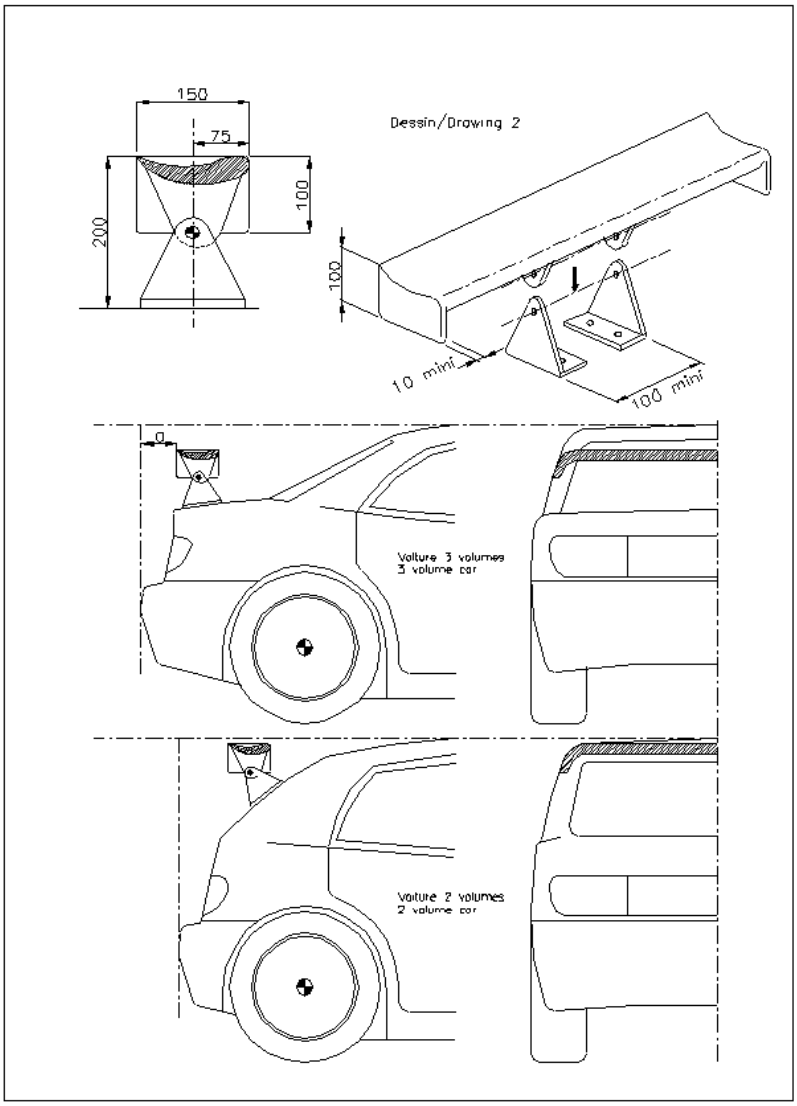
150
75
100
200
Dessin/Drawing 2
100
10 mini
100 mini
0
Voiture 3 volumes
3 volume car
Voiture 2 volumes
2 volume car

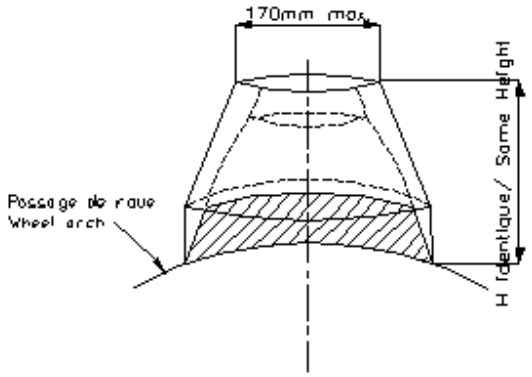

Dessin/Drawing 3

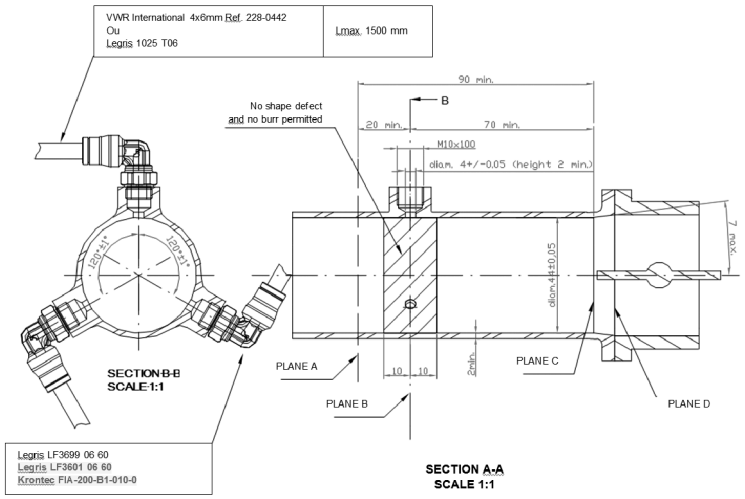

MATERIAL : ALUMINIUM ALLOY ONLY
FREE SHAPE DOWNSTREAM OF PLANE A BUT CROSS SECTION AREA MUST BE GREATER THAN THAT OF 44mm DIAMETER
SECTION B-B SHOWS SOLE LOCATION PERMITTED FOR BOOST PRESSURE SENSOR BETWEEN THROTTLE VALVE AND COMBUSTION CHAMBER

附录 3 / APPENDIX 3
BE 183-176 型尾翼载体轮廓线形
SINGLE BE 183-176 TYPE CARRIER PROFILE

Be 183-176 Ro = 2.69 Xo = 2.69 -Yo = 2.79

x %	0	1.25	2.5	5	7.5	10	15	20	30	40	50	60	70	80	90	95	100
-Yv	2.79	0.53	0.07	0.1	0.62	1.32	2.86	4.35	6.79	8.8	10.02	11.4	11.95	11.8	9.03	5.58	0.1
-Yo	2.79	7.31	9.4	12.52	14.95	16.94	20.05	22.3	25.01	25.98	25.65	24.39	21.44	17.43	11.43	6.63	0.2

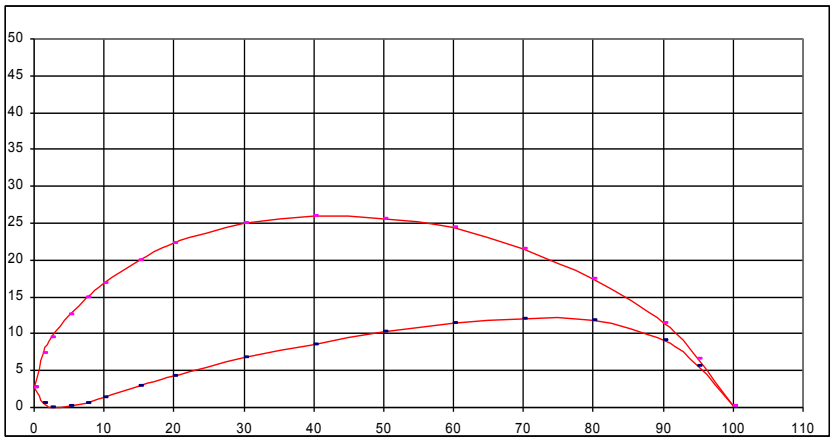

附录 4：涡轮增压器
APPENDIX 4：Turbocharger

Dessin / Drawing n°13：

Dimensions en mm / Dimensions in mm

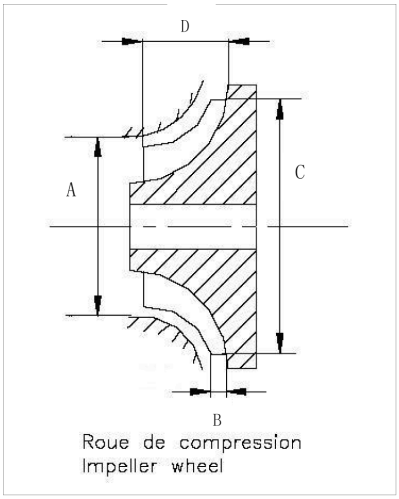

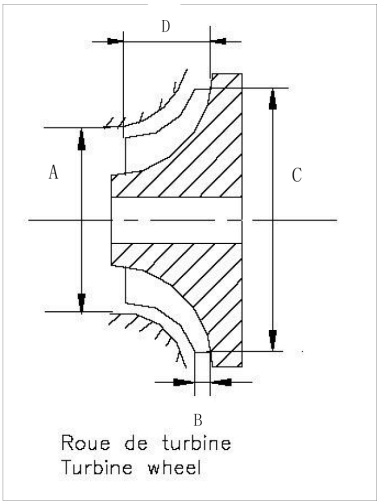

1 Centre Housing

• Cast iron* such as TR30R with speed sensor thread

• Spacer, sealing pack, ball bearing, piston rings and bolts identical (standard rebuild kit)

* part machined from cast billet permitted

2 Compressor

• Cast* aluminium housing 0.6 A/R

• Cast* aluminium wheel 60mm 50 trim

• Cast* aluminium Backplate

• V-Band compressor housing to backplate connection

* part machined from cast billet permitted

Dimensions A, B, C, D according to drawing n°13:

A = 43.15 +/- 0.1 mm

B = 3.82+/- 0.1 mm

C = 60.00 +/- 0.2 mm

D = 19.46 +/- 0.1 mm

Number of blades = 10

3 Turbine

• Cast* stainless steel housing 0.73 A/R

• Inconel or steel shaft

• High nickel super alloy turbine wheel 54mm 84 trim

* part machined from cast billet permitted

Dimensions A, B, C, D, according to drawing n°13:

A = 50.49 +/- 0.1 mm

B = 10.08 +/- 0.3 mm

C = 54.00 +/- 0.1 mm

D = 22.35 +/- 0.3 mm

Number of blades = 9

4 FIA-approved turbochargers

Make / type / reference GARRETT GTR-2560R P/N 803562-0008

…….

ANNEXE : MOTEUR
APPENDIX : ENGINE

Voir règlement d'homologation pour Variante-Kit Super2000 (Rallyes)/ WRC.	See homologation regulations for Super 2000 Kit-Variant (Rallies) / WRC.